Sachse, Texas

Sachse City Hall
3815 Sachse Road
Building B
Sachse, Texas 75048

Meeting Agenda

City Council

Monday, March 4, 2013 | **7:30 PM** | **Council Chambers**

The Mayor and Sachse City Council request that all cell phones and pagers be turned off or set to vibrate. Members of the audience are requested to step outside the Council Chambers to respond to a page or to conduct a phone conversation.

The City Council of the City of Sachse will hold a Regular Meeting on Monday, March 4, 2013, at 7:30 p.m. in the Council Chambers at the Sachse City Hall, 3815 Sachse Road, Building B, Sachse, Texas to consider the following items of business:

Invocation and Pledges of Allegiance to U.S. and Texas Flags.

A. Pledge of Allegiance to the Flag of the United States of America: I pledge allegiance to the flag of the United States of America, and to the Republic for which it stands: one nation under God, indivisible, with liberty and justice for all.
B. Pledge of Allegiance to the Texas State Flag: Honor the Texas flag; I pledge allegiance to thee, Texas, one state under God, one and indivisible.

1. CONSENT AGENDA.

1.a ALL ITEMS LISTED ON THE CONSENT AGENDA WILL BE CONSIDERED BY THE CITY COUNCIL AND WILL BE ENACTED BY ONE MOTION, THERE WILL BE NO SEPARATE DISCUSSION OF THESE ITEMS UNLESS A COUNCIL MEMBER OR CITIZEN SO REQUESTS.

13-1392 Consider approval of the minutes of the February 18, 2013, regular meeting.

Executive Summary
Minutes from the recent Council meeting.
Attachments: CC Min. 02.18.13.pdf

13-1391 Consider approval of a resolution for the City Council of the City of Sachse, Texas, approving the terms and conditions of the Concession Agreement, by and between the City of Sachse, Texas and Sachse Baseball Association to provide concession services at certain City athletic complexes.

Executive Summary
The City of Sachse and the SBA (Sachse Baseball Association) have worked together in providing concessions for both Salmon

Park and Heritage Park since 2004. This agreement would continue this relationship for up to five years. It is a two year contract renewable each year up to five years. SBA has a commitment to pay the City of Sachse $1,000 each year for the concession services. The SBA has been generous with their increased revenue in putting funds back into the community through scholarship programs for lower income kids, equipment and improvements to the ball fields.

Attachments: SachseSportsAssocConcessionResolution2013PDF

Concession Agreement2013PDF

13-1388 Consider a resolution of the City Council of the City of Sachse, Texas, authorizing the purchase of a one-ton chassis cab pickup truck for the Public Works Street Department through the Houston-Galveston Area Council of Governments HGACBuy Cooperative Purchasing Program in the amount not to exceed $22,601.00.

Executive Summary
Resolution providing for authorization to purchase a one-ton truck.

Attachments: res one-ton truck purchase.pdf

13-1393 Consider receiving the Monthly Revenue and Expenditure Report for the period ending January 31, 2013.

Executive Summary
The Finance Department will prepare a report each month to update the City Council regarding revenues and expenditures of the City. The attached report is for the month ended January 31, 2013.

Attachments: GF 1-31-2013 Budget Report.pdf

UF 1-31-2013 Budget Report.pdf

DS 1-31-2013 Budget Report.pdf

SEDC 1-31-2013 Budget Report.pdf

13-1395 Consider an Ordinance Adopting the amendment to the City of Sachse Employee Leave Policy attached hereto as Exhibit "A".

Executive Summary
Consider an Ordinance Adopting Revisions to the Employee Policy Manual, Section 7 Leave and Time Off, Section 7.08, Family Medical Leave Act (FMLA), Addendum A.

Attachments: Addendum A Ordinance and FMLA Leave Policy.pdf

Family Medical Leave Act Revisions 2 2013.pdf

13-1397 Consider a resolution of the City Council of the City of Sachse, Texas, approving the terms and conditions of a facilities agreement, by and between the City of Sachse and Oxford Development Holdings, LLC; and providing an effective date.

Executive Summary
Oxford Development Holdings, LLC is constructing the Glen Carr House of Sachse, a memory care facility located at Bunker Hill Road and Ben Davis Road. In order to serve the facility with water, the developer is required to construct approximately 747 linear feet of waterline along the North Right-of-way line of Bunker Hill Road. To serve the development, an 8 inch waterline is required. However, Sachse's Capital Improvement Plan includes a 12 inch waterline instead of an 8 inch waterline. This facilities agreement would allow for the City's participation in the cost to upsize the waterline from an 8 inch line to a 12 inch line. The City's costs would cover the true cost of the upsizing, not to exceed $21,180.20.

Attachments: Property Description
Facilities Agreement
Facilities Agreement - Glenn Carr - Oxford Development Holdings LLC
Sachse RESO approving Facilities Agreement with Oxford Development Holdin

2. MAYOR AND CITY COUNCIL ANNOUNCEMENTS REGARDING SPECIAL EVENTS, CURRENT ACTIVITIES, AND LOCAL ACHIEVEMENTS.

13-1401 Staff Briefing: Human Resources.

Executive Summary
Each month a briefing is given to City Council providing an update of recent actions and events for a specific department. This month the Human Resources Department will brief the council.

Attachments: HR Staff Briefing Handout.pdf

3. CITIZEN INPUT.

The public is invited at this time to address the Council. The Mayor will ask you to come to the Microphone and state your name and address for the record. If your remarks pertain to a specific Agenda item, please hold them until that item, at which time the Mayor may solicit your comments.

The City Council is prohibited from discussing any item not on the posted agenda according to the Texas Open Meetings Act.

4. REGULAR AGENDA ITEMS.

13-1365 Consider receiving the City's Comprehensive Financial Report (CAFR) for the fiscal year ending September 30, 2012.

Executive Summary
Brooks, Cardiel & Company, PLLC, an independent audit firm, has audited the City's Financial Statements for the period ending September 30, 2012 and has issued an unqualified or "clean" opinion. Mike Brooks, CPA will be present to make comments and answer questions.

13-1389 Consider the application of Ms. Janis Tillerson for approval of a Preliminary Plat for The Enclave, being 24 single-family residential lots on approximately 9.9768 acres, located on the southeast corner of Woodbridge Parkway and Laurel Crest Lane.

Executive Summary
The applicant is requesting to subdivide an approximately 9.9768-acre tract to consist of 24 single-family residential lots, located on the southeast corner of Woodbridge Parkway and Laurel Crest Lane.

Attachments: CD - ENCLAVE PP CC - ATTACHMENT 1.pdf
CD - ENCLAVE PP CC - ATTACHMENT 2.pdf

13-1383 Discuss library equipment use for public groups using the library's meeting room.

Executive Summary
Staff is seeking direction from the Council on library equipment use. There is currently a facility use policy that does not address library equipment usage for public groups using the library's meeting room.

Attachments: Equipment Use March 4, 2013 PDF
FacilityUsePDF

13-1400 Discuss City of Sachse Standard Construction Details.

Attachments: Powerpoint Presentation.pdf.pdf
Existing Section 1 - General Notes.pdf
Existing Section 2 - Paving Details.pdf
Existing Section 3 - Storm Sewer Details.pdf
Existing Section 4 - Sanitary Sewer Details.pdf.pdf
Existing Section 5 - Water Details.pdf
Existing Section 6 - Miscellaneous Details.pdf

13-1399 The City Council shall convene into Executive Session pursuant to

the TEXAS GOVERNMENT CODE, Section § 551.087 (Economic Development) to deliberate on economic development incentives and financial prospects for property located on the Northwest side of State Highway 78, approximately 500 feet Northeast of the intersection of Ranch Road and State Highway 78.

Consider any action necessary as a result of executive session.

Executive Summary
Closed Executive Session as provided by State Law.

5. ADJOURNMENT.

Vision Statement: Sachse is a friendly, vibrant community offering a safe and enjoyable quality of life to all who call Sachse home.

The City of Sachse reserves the right to reconvene, recess or realign the regular session or called Executive Session or order of business at any time prior to adjournment. Note: The Sachse City Council reserves the right to convene into Executive Session pursuant to the Texas Government Code, Title 5, Chapter 551 regarding posted items on the regular meeting agenda.

State law prohibits the introduction or discussion of any item of business not posted at least seventy-two (72) hours prior to the meeting time. Therefore, during Citizen Input for example, the Council is prohibited by state law to deliberate or take action on any issues introduced by the public other than to take them under advisement. Posted: March 1, 2013; 5:00 p.m. Terry Smith, City Secretary _____.

If you plan to attend this public meeting and you have a disability that requires special arrangements at the meeting, please contact Terry Smith, City Secretary, at (972) 495-1212, 48 business hours prior to the scheduled meeting date. Reasonable accommodations will be made to assist your needs.

Sachse, Texas

Sachse City Hall
3815 Sachse Road Building
B
Sachse, Texas 75048

Legislation Details (With Text)

File #:	13-1392	**Version:**	1	**Name:**	Consider approval of the minutes of the February 18, 2013, regular meeting.
Type:	Agenda Item			**Status:**	Agenda Ready
File created:	2/22/2013			**In control:**	City Council
On agenda:	3/4/2013			**Final action:**	
Title:	Consider approval of the minutes of the February 18, 2013, regular meeting. Executive Summary Minutes from the recent Council meeting.				
Sponsors:					
Indexes:					
Code sections:					
Attachments:	CC Min. 02.18.13.pdf				

Date	Ver.	Action By	Action	Result

Title
Consider approval of the minutes of the February 18, 2013, regular meeting.

Executive Summary
Minutes from the recent Council meeting.

Background
Minutes form the most recent Council meeting on February 18, 2013, for review and approval.

Policy Considerations
Not applicable.

Budgetary Considerations
Not applicable.

Staff Recommendations
Approval of the minutes of the February 18, 2013, regular meeting, as a Consent Agenda Item.

powered by Legistar™

REGULAR MEETING

OF THE

CITY COUNCIL OF THE CITY OF SACHSE

FEBRUARY 18, 2013

The City Council of the City of Sachse held a Regular Meeting on Monday, February 18, 2013 at 7:30 p.m. at the Sachse City Hall after proper notice. The roll of the duly constituted City Council Members was called which members are as follows, to wit:

Mayor Mike Felix
Mayor Pro Tem Jared Patterson
Councilman Bill Adams
Councilman Brett Franks
Councilwoman Pat McMillan
Councilman Todd Ronnau
Councilman Mark Timm

and all were present.

Staff present: City Manager Billy George, City Secretary Terry Smith, Special Projects Coordinator Denise Vice, Community Development Director Marc Kurbansade, Police Chief Dennis Veach, Parks and Recreation Director Lance Whitworth, City Engineer Greg Peters, Human Resources Manager Laura Morrow; Sachse EDC Director Carlos Vigil, Interim Finance Director Teresa Savage and Interim Fire Chief Andy Jones.

Invocation and Pledge of Allegiance to U.S. and Texas Flags:
The invocation was offered by Councilman Timm and the pledges were led by Councilman Franks.

1. Consent Agenda:
Councilman Adams moved to approve the Consent Agenda consisting of 13-1367 Consider approval of the minutes of the February 4, 2013, special meeting; 13-1368 Consider approval of the minutes of the February 4, 2013, regular meeting; 13-1369 Ordinance No. 3452 calling for the May 11, 2013 City Officers' (City Council) election; 13-1361 Consider acceptance of the Quarterly Budget and Investment Reports for the quarter ended December 31, 2012; 13-1375 Resolution No. 3453 approving the terms and conditions of Addendum "A" to the service agreement, by and between the City of Sachse, Texas and Emergicon, L.L.C. to provide ambulance billing, collection services and patient care reporting hardware and software; and 13-1364 Consider the application of Steve Pirkey for approval of a Preliminary Plat for replat of Lots 2R and 3, Block 1, Woodbridge Commons Phase 1, on approximately 2.083 acres, on the north side of Ranch Road, at the intersection with State Highway 78. The motion was seconded by Councilman Timm and passed unanimously.

2. Mayor and City Council Announcements regarding special events, current activities and local achievements:
13-1373 Presentation of Life Saving Awards by Mayor Felix.

13-1370 Proclamation declaring February 21-24, 2013 as Delta Sigma Theta Sorority Days.

Mayor Felix announced the following events: February 26th is the Fire Chief Candidates public reception at the Library; March 23rd 10:00 a.m. is the Easter Egg Scramble at Heritage Park; March 29th City Offices are closed for Good Friday; March 30th Sachse Baseball Opening Day Parade and April 13th is Arbor Day and the Great American Cleanup.

3. Citizen Input:

Casey Zandt, Community Waste Disposal, stated they are involved in the community and explained their X-treme Green Event that includes electronic and hazardous waste collection. He stated if Sachse is going out for bids, they would like to be included in the process.

Bob Jensen 7200 Bailey Road, requested the speed humps on Bailey Road be removed.

Jackie Eichelberger 7121 Bailey Road, stated the speed humps were a correction of the speed on the street.

4. Regular Agenda Items:

13-1371 Consider an ordinance ordering an election on proposed amendments to the Home Rule Charter of the City of Sachse to be held on May 11, 2013, in conjunction with the election for City Officers; Proposing amendments to the Home Rule City Charter Authorizing the City Manager to execute an election services contract with the Dallas County Elections Department; and naming an effective date.

Following discussion, Councilman Timm moved to approve Ordinance No. 3454 ordering an election on proposed amendments to the Home Rule Charter of the City of Sachse to be held on May 11, 2013, in conjunction with the election for City Officers; Proposing amendments to the Home Rule City Charter Authorizing the City Manager to execute an election services contract with the Dallas County Elections Department; and naming an effective date, as presented Version No. 1. The motion was seconded by Councilwoman McMillan and carried unanimously.

13-1307 Consider approval of an Ordinance of the City of Sachse, Texas, amending the Sachse Code of Ordinances by amending Chapter 11, titled "Zoning", Article 4 titled "General Provisions Applying to All or Several Districts" by adding Section 10 titled "Outdoor Lighting".

Following discussion, Councilman Timm moved to approve Ordinance No. 3455 of the City of Sachse, Texas, amending the Sachse Code of Ordinances by amending Chapter 11, titled "Zoning", Article 4 titled "General Provisions Applying to All or Several Districts" by adding Section 10 titled "Outdoor Lighting" with Version No. 3, as presented. The motion was seconded by Councilman Ronnau and carried unanimously.

Councilman Adams made a motion to move Agenda Item 13-1372 Consider action to establish a roll-out date for broadcast of Council meetings, to the end of the agenda. The motion was seconded by Councilman Ronnau and carried unanimously.

13-1366 Discuss the existing perimeter masonry walls associated with portions of the Sachse on the Creek Phases 1 & 2, Park Lake Estates Phases 2 & 4, Hudson Crossing Phases 1 & 2, and Westgate subdivisions.

Community Development Director Marc Kurbansade reviewed the matter with the City Council. Following discussion, no formal Council action was taken.

13-1374 The City Council shall convene into Executive Session pursuant to the TEXAS GOVERNMENT CODE, Section §551.071 (Consultation with Attorney) and § 551.087 (Economic Development) to seek legal advice and to deliberate on economic development incentives and financial prospects for property located on the Northwest side of State Highway 78, approximately 500 feet Northeast of the intersection of Ranch Road and State Highway 78.
Consider any action necessary as a result of executive session.

At 8:50 p.m. Mayor Pro Tem Patterson moved to recess to executive session. The motion was seconded By Councilman Timm and carried unanimously.

At 9:17 p.m. Councilman Adams moved to return to open session. The motion was seconded by Mayor Pro Tem Patterson and carried unanimously.

Mayor Felix stated there is no action necessary as a result of executive session.

13-1372 Consider action to establish a roll-out date for broadcast of Council meetings.
Following discussion, Councilman Timm moved to direct staff to proceed as discussed. The motion was seconded by Mayor Pro Tem Patterson. Following discussion, the motion was amended to include a March 4th delayed broadcast on March 5th and March 18th begin live broadcasts. The motion carried unanimously.

There being no further business, Councilman Timm made a motion to adjourn. The motion was seconded by Councilman Adams and carried unanimously. The meeting adjourned at 9:54 p.m.

ATTEST:

_____
CITY SECRETARY

APPROVED:

_____
MAYOR

Sachse City Hall
3815 Sachse Road Building
B
Sachse, Texas 75048

Legislation Details (With Text)

File #:	13-1391	**Version:** 2	**Name:**	Concession Stand Agreement	
Type:	Agenda Item		**Status:**	Agenda Ready	
File created:	2/22/2013		**In control:**	City Council	
On agenda:	3/4/2013		**Final action:**		

Title: Consider approval of a resolution for the City Council of the City of Sachse, Texas, approving the terms and conditions of the Concession Agreement, by and between the City of Sachse, Texas and Sachse Baseball Association to provide concession services at certain City athletic complexes.

Executive Summary
The City of Sachse and the SBA (Sachse Baseball Association) have worked together in providing concessions for both Salmon Park and Heritage Park since 2004. This agreement would continue this relationship for up to five years. It is a two year contract renewable each year up to five years. SBA has a commitment to pay the City of Sachse $1,000 each year for the concession services. The SBA has been generous with their increased revenue in putting funds back into the community through scholarship programs for lower income kids, equipment and improvements to the ball fields.

Sponsors:

Indexes:

Code sections:

Attachments: SachseSportsAssocConcessionResolution2013PDF
Concession Agreement2013PDF

Date	Ver.	Action By	Action	Result

Title
Consider approval of a resolution for the City Council of the City of Sachse, Texas, approving the terms and conditions of the Concession Agreement, by and between the City of Sachse, Texas and Sachse Baseball Association to provide concession services at certain City athletic complexes.

Executive Summary
The City of Sachse and the SBA (Sachse Baseball Association) have worked together in providing concessions for both Salmon Park and Heritage Park since 2004. This agreement would continue this relationship for up to five years. It is a two year contract renewable each year up to five years. SBA has a commitment to pay the City of Sachse $1,000 each year for the concession services. The SBA has been generous with their increased revenue in putting funds back into the community through scholarship programs for lower income kids, equipment and improvements to the ball fields.

Background
SBA (Sachse Baseball Association) has been an established organization for many years in Sachse. They have had numerous people serve as President and on the Board for the organization. They offer leagues for hundreds of kids in Sachse. They rely on the City for use of facilities, including fields and concession stands. At the September 17, 2012, City

Council meeting Staff discussed with Council the upcoming ball season and the relationship with SBA. The City Council gave staff direction to move forward with an agreement with SBA to provide concessions for both Salmon Park and Heritage Park for the upcoming seasons. The City Council agreed to provide a concession agreement with SBA for a two year contract renewable each year up to five years. The City Attorney has made the necessary changes to the Contract for approval by the City Council.

Policy Considerations
Approve a resolution for the City Council of the City of Sachse, Texas, approving the terms and conditions of the Concession Agreement, by and between the City of Sachse, Texas and Sachse Baseball Association to provide concession services at certain City athletic complexes.

Budgetary Considerations
A $1,000 annual fee will be assessed to the SBA and collected by the City of Sachse each year. The funds will be deposited back into the City of Sachse's general fund.

Staff Recommendations
Staff recommends approving a resolution for the City Council of the City of Sachse, Texas, approving the terms and conditions of the Concession Agreement, by and between the City of Sachse, Texas and Sachse Baseball Association to provide concession services at certain City athletic complexes, as a Consent Agenda Item.

RESOLUTION NO. _____

A RESOLUTION OF THE CITY COUNCIL OF THE CITY OF SACHSE, TEXAS, APPROVING THE TERMS AND CONDITIONS OF THE CONCESSION AGREEMENT, BY AND BETWEEN THE CITY OF SACHSE, TEXAS AND SACHSE BASEBALL ASSOCIATION TO PROVIDE CONCESSION SERVICES AT CERTAIN CITY ATHLETIC COMPLEXES; AND PROVIDING AN EFFECTIVE DATE.

WHEREAS, the City of Sachse desires to provide concession services to certain City athletic complexes; and

WHEREAS, the City Council of the City of Sachse has been presented with a proposed Agreement between the City of Sachse and Sachse Baseball Association (the "Agreement") to provide concession services at certain City athletic complexes; and

WHEREAS, upon full review and consideration of the Agreement and all matters related thereto, the City Council is of the opinion and finds that the terms and conditions thereof should be approved, and that the City Manager should be authorized to execute the Agreement on behalf of the City of Sachse, Texas;

NOW THEREFORE BE IT RESOLVED BY THE CITY COUNCIL OF THE CITY OF SACHSE, TEXAS:

SECTION 1. That the City Manager is hereby authorized to execute the Agreement, attached hereto as Exhibit "A", with Sachse Baseball Association to provide concession services to certain City athletic complexes

.

SECTION 2. This Resolution shall take effect immediately from and after its passage, and it is accordingly so resolved.

DULY RESOLVED AND ADOPTED by the City Council of the City of Sachse, Texas, this the _____ day of _____, 2013.

CITY OF SACHSE, TEXAS

_____

Mike Felix, Mayor

ATTEST:

_____

Terry Smith, City Secretary

STATE OF TEXAS §
§ **CONCESSION AGREEMENT**
COUNTY OF DALLAS §

This Agreement ("Agreement") is made by and between the City of Sachse, Texas, a Texas municipal corporation ("City"), and Sachse Baseball Association ("Concessionaire"), (collectively referred to as "Parties" and individually as a "Party"), acting by and through their respective representatives.

RECITALS:

WHEREAS, City desires to make available concession services at certain City athletic complexes which are identified in Exhibit A which is attached hereto; and; and

WHEREAS, City desires to have an independent contractor operate and provide food and beverage services at Heritage Park and Salmon Park ("Athletic Complexes") during Sachse Baseball Association events, including league and tournament play ("Concession Services");

NOW, **THEREFORE**, in exchange for the mutual covenants and promises set forth herein and other good and valuable consideration, the sufficiency and receipt of which are hereby acknowledged, the parties agree as follows:

Article I
Term

The Initial Term of this Agreement shall commence effective April 1, 2013, (the "Effective Date") and end on March 31, 2015, for a two-year term. City shall have the option to renew this Agreement under the same terms and conditions as provided for herein for three (3) additional terms of one (1) year each (each a "Renewal Term") by providing written notice to Concessionaire thirty (30) days prior to the end of the then current term.

Article II
Termination

2.1 This Agreement shall terminate:

(a) by mutual agreement of the parties;

(b) by either party by providing the other party with thirty (30) days prior written notice;

(c) by City, if Concessionaire is in breach of any of the provisions of this Agreement; or

(d) upon expiration of the Term of this Agreement.

2.2 It is understood and agreed that Concessionaire shall vacate the premises without delay upon ten (10) days notice in writing by the City in the event this Agreement is for any reason terminated, and at the termination of this Agreement, and in case the Concessionaire fails to vacate the said premises upon said notice of cancellation or termination of this Agreement, the City shall not be responsible for any damage that might occur to said Concessionaire by virtue of the City forcibly entering and dispossessing the said Concessionaire, and without prejudice to any remedies which might otherwise be used for possession or for arrears of payments.

Article III
Concessionaire's Obligations and Operations

3.1 Sales of Food, Beverages, and other Products.

(a) All Concession Services provided by Concessionaire at the Athletic Complexes shall be conducted from City-approved Concession Areas. The Parks and Recreation Director (hereinafter, "Director") will locate and determine the all Concession Areas in each Athletic Complex to be used by Concessionaire in operations.

(b) Concessionaire shall be responsible for purchasing and providing, at Concessionaire's sole cost, the necessary and sufficient food and beverages and other products to be sold and served by Concessionaire as part of the Concession Services at the Athletic Complexes;

(c) Concessionaire shall be responsible for all of Concessionaire's direct expenses, including but not limited to, labor, vehicles, food, beverages, napkins, cups, straws, supplies, labor, permits, licenses, legal fees, professional accounting fees, administrative fines, cash registers, equipment, and supplies.

(d) Concessionaire shall at all reasonable times keep for sale and supply the public with hot drinks, cold drinks, and other commodities, for which there is or shall be a reasonable demand.

(e) The prices and products to be served as part of the Concession Services shall be approved by the Parks and Recreation Director ("Director"). The list of products to be served and the prices to be charged shall be submitted to Parks and Recreation Director prior to execution of this Agreement. Any change to the product list or pricing of items shall be approved by the Director.

(f) Non-packaged food may be prepared only in Athletic Complex sites with permanent concession buildings and in accordance with all applicable City, State, County or other governmental regulations relating to public health. Concessionaire shall be solely responsible for making application to, and securing from, any and all applicable licenses and permits required by City, Dallas County,

or any other governmental agency to sell and prepare food at the Athletic Complexes.

(g) Concessionaire shall not be permitted to sell any type of alcoholic beverage or tobacco product.

(h) Concessionaire shall not be permitted to make any sale with any element of chance.

(i) Concessionaire shall not sell any beverages in glass bottles.

(j) Concessionaire shall not use loud music or amplified announcements to attract sales.

(k) Concessionaire must accept cash for payment for Concession Services. Concessionaire shall not use a coupon system for Concession Service purchases. Concessionaire is responsible for collecting and safekeeping its money. City assumes no responsibility for lost or stolen money. Concessionaire is required to make and provide change for the concession operations. City will not provide change for Concessionaire.

3.2 Sales Tax. Concessionaire is solely responsible for paying all applicable Texas State Sales Tax. Concessionaire shall pay all applicable Texas State Sales Tax on the Concessionaire's total concession sales. Concessionaire shall pay all taxes of every nature and description arising out of or in any manner connected with the sale of its products.

3.3 Cleanliness. Concessionaire's operations at the Athletic Complexes shall at all times be conducted in a clean, orderly, and legitimate manner in accordance with any and all existing City policies, ordinances and any laws requiring operation of the nature of Concessionaire. No rubbish, glass, bottles, or cans of any kind shall be placed on the ground in or around the Concession Areas; all such items are to be placed in trash receptacles. Concessionaire shall be responsible for cleaning all Concession Areas immediately after each event.

3.4 Condition of Concession Areas. Concessionaire accepts the Concession Areas in the condition on the date the City makes the areas available. City disclaims all representations and warranties, expressed or implied as to the condition of the Concession Areas. The Concessionaire shall not use the Concession Areas for any purpose other than the services described herein. Concessionaire does not have the right to sublet any Concession Areas.

3.5 Performance. Concessionaire's employees and/or volunteers shall perform in a first class and reputable manner continuously during all operation hours.

3.6. Signs. All signage shall be in compliance with all applicable City Ordinances. All signage located within the facility shall be approved by the Director.

3.7. Supervision. City shall have the right to supervise the manner of exercising the privileges hereby granted and the conduct of Concessionaire. Repeated complaints or misconduct by Concessionaire or its employees may be grounds for termination of this Agreement.

3.8 Hours of Operation. Concessionaire's hours of operation for all athletic events held at the Athletic Complexes will be fifteen (15) minutes before the first scheduled game time until thirty (30) minutes after the last scheduled game begins. City reserves the right to regulate the hours that concessions may be sold at the Athletic Complexes.

3.9 Location. The director will locate and determine the places that may be used by Concessionaire in operations.

3.10 Alterations. It is specifically understood that any changes or alterations within any of the Concession Areas (including painting) shall not be done by Concessionaire without prior written approval from the City.

3.11 Additional Concessions. It is expressly understood and agreed by Concessionaire that the City reserves the right to operate any additional concessions other than those granted to Concessionaire herein, in the event that the City determines that such additional concession services are in the public interest.

3.12 Waste Disposal. Concessionaire shall not dispose of any waste water on or around any trees or shrubbery in any Park. Disposal of such water must be through sanitary sewers or in such manners as not to injure any growing plants or grass and as to not be unsightly.

3.13 Employment Requirements.

(a) Concessionaire shall not discriminate against any employee or applicant for employment, and in providing the public service specified in this Agreement, because of race, creed, color, or national origin. Concessionaire shall, in all solicitations or advertisements for employees placed by or on behalf of the Concessionaire, state that all qualified applicants will receive consideration for employment without regard to race, creed, color or national origin.

(b) Concessionaire shall pay all federal withholding and any other appropriate taxes or charges to its employee's.

(c) Concessionaire shall not employ individuals under sixteen (16) years of age. Any individual under eighteen (18) years of age working at the facility shall be under the direct supervision of person over the age of eighteen (18). All employees shall conduct themselves at all times in a manner acceptable to the City; complaints against any employee shall be directed to the Concessionaire.

Article IV
City's Obligations

4.1 City shall provide the wastewater disposal and electrical services to the Concessionaire's facilities. City shall not be liable for interruption of electricity, water, wastewater, or any other utility service.

4.2 Any additional outlets for electricity, water or any other utilities desired by Concessionaire shall be installed at its expense, and only after approval of the City Building Official. Any additions shall become a permanent fixture of the building.

Article V
Compensation; Reporting

5.1 Concessionaire shall pay One Thousand Dollars ($1000.00) annually, due on the 1st day of April 2013. Any payment not received by that date shall be considered a late payment and this Agreement may be terminated immediately.

5.2 Concessionaire shall keep an accurate and true record of sales made in connection with the Concession Services provided at the Athletic Complexes, and shall permit the City to inspect and audit said financial records upon reasonable notice.

5.3 Concessionaire shall provide the City with an annual financial report. The report shall include both revenues and expenses. City reserves the right to require that the report be certified by a certified public accountant at Concessionaire's expense.

Article VI
Miscellaneous

6.1 Inspection. City reserves the right to inspect the Concessionaire's Concession Areas and the Concessionaire's operations at any time during the term of this Agreement. The right of inspection reserved to the City hereunder shall impose no obligation upon the City to make such inspections or to ascertain the condition of the Concession Area and shall impose no liability upon the City for failure to make such inspections.

6.2 **Indemnification and Release. CONCESSIONAIRE, BINDING ITS VOLUNTEERS, HEIRS, EXECUTORS, ADMINISTRATORS, AGENTS AND ASSIGNS, DOES HEREBY AGREE TO COMPLETELY AND WHOLLY RELEASE, INDEMNIFY AND HOLD HARMLESS THE CITY, ITS AGENTS, ITS OFFICERS, INDEPENDENT CONTRACTORS, EMPLOYEES AND ALL PERSONS NATURAL OR CORPORATE, IN PRIVITY WITH THEM OR ANY OF THEM, FROM ANY AND ALL CLAIMS, CAUSES OF ACTION OF ANY KIND WHATSOEVER, STATUTORY OR OTHERWISE, PERSONAL INJURY, INCLUDING DEATH, PROPERTY DAMAGE, LAWSUITS AND JUDGMENTS, INCLUDING COURT COSTS, EXPENSES AND**

REASONABLE ATTORNEY'S FEES, AND ALL OTHER EXPENSES RESULTING DIRECTLY OR INDIRECTLY FROM THE ACTIVITIES, PROGRAMS AND EVENTS OCCURRING, INCLUDING, WITHOUT LIMITATION, THE ACTIONS, OMISSIONS AND ACTIVITIES OF THE CONCESSIONAIRE AT ANY EVENT, OR WHICH MAY BE SUSTAINED BY REASON OF ANY ACT OR OMISSION ON THE PART OF THE CONCESSIONAIRE, ITS VOLUNTEERS, EMPLOYEES, AGENTS AND/OR CONTRACTORS, OR BY ANYONE ACTING DIRECTLY OR INDIRECTLY, EMPLOYED BY ANY OF THEM, OR BY ANYONE FOR WHOSE ACTS OR OMISSIONS ANY OF THEM MAY BE LIABLE, OR FOR ANY DAMAGES OR LOSS PROFITS IF AN EVENT AT ANY ATHLETIC COMPLEX IS CANCELLED FOR ANY REASON. IT IS THE UNDERSTANDING OF THE PARTIES THAT THIS RELEASE, INDEMNITY AND HOLD HARMLESS AGREEMENT SHALL APPLY WHETHER OR NOT THE CLAIMS, DAMAGES, CAUSES OF ACTION OF ANY KIND WHATSOEVER, STATUTORY OR OTHERWISE, PERSONAL INJURY, INCLUDING DEATHS, PROPERTY DAMAGE, LAWSUITS, JUDGMENTS, COURT COSTS, ATTORNEY'S FEES, OR ANY OTHER EXPENSE ARISING DIRECTLY OR INDIRECTLY FROM THE NEGLIGENCE OF WHATEVER NATURE, OMISSIONS, WILLFUL OR INTENTIONAL ACTS OF THE CONCESSIONAIRE OR CONCESSIONAIRE'S OFFICERS, AGENTS, EMPLOYEES, INDEPENDENT CONTRACTORS, OTHER REPRESENTATIVES, INVITEES, LICENSEES, OR GUESTS.

6.3 Insurance. Prior to commencing operations under this Agreement, the Concessionaire will obtain from an insurance company, licensed in the State of Texas and acceptable to the City, and carry liability insurance with the City named as an additional insured, providing for limits no less than One Hundred Thousand Dollars ($100,000.00) per person and any one claim, an aggregate limit of Three Hundred Thousand Dollars ($300,000.00) for any number of persons or claims arising from any one accident with respect to bodily injuries or death resulting there from, and Fifty Thousand Dollars ($50,000.00) for property damage for any person or persons resulting from the operations of the Concessionaire under the terms of this Agreement.

6.4 Independent Contractor. It is understood and agreed by and between the parties that the Concessionaire in satisfying the conditions of this Agreement, is acting independently, and that the City assumes no responsibility or liabilities to any third party in connection with these actions. All services to be performed by Concessionaire pursuant to this Agreement shall be in the capacity of an independent contractor, and not as an agent or employee of the City. Concessionaire shall supervise the performance of its volunteers and services and shall be entitled to control the manner and means by which its services are to be performed, subject to the terms of this Agreement.

6.5 Notice. Any notice required or permitted to be delivered hereunder shall be deemed received when sent in the United States Mail, Postage Prepaid, Certified Mail, Return Receipt Requested, or by hand-delivery or facsimile transmission addressed to the respective party at the address set forth below:

If to the City:	Parks and Recreation Director City of Sachse 3815 Sachse Road Sachse, Texas 75048
with cc to:	Peter G. Smith Nichols, Jackson, Dillard, Hager & Smith, LLP 500 North Akard Street 1800 Lincoln Plaza Dallas, Texas 75201
If to Concessionaire:	Sachse Baseball Association _____ _____ _____ _____

6.6 Entire Agreement. This Agreement represents the entire agreement among the parties with respect to the subject matter covered by this Agreement. There is no other collateral, oral or written agreement between the parties that in any manner relates to the subject matter of this Agreement.

6.7 Severability. In the event any section, subsection paragraph, sentence, phrase, or word herein is held invalid, illegal, or unconstitutional, the balance of this Agreement shall stand, shall be enforceable, and shall be read as if the parties intended at all times to delete said invalid section, subsection, paragraph, sentence, phrase, or word.

6.8 Governing Law. The validity of this Agreement and any of its terms and provisions as well as the rights and duties of the parties shall be governed by the laws of the State of Texas, and venue for any action concerning this Agreement shall be in the State District Court of Dallas County, Texas.

6.9 Assignment. This Agreement may not be assigned by Concessionaire without the express written consent of the City Manager.

6.10 Recitals. The recitals to this Agreement are incorporated herein.

6.11 Exhibits. All exhibits attached hereto to this Agreement are incorporated herein.

6.12 Counterparts. This Agreement may be executed in counterparts. Each of the counterparts shall be deemed an original instrument, but all of the counterparts shall constitute one and the same instrument.

[Signature page to follow]

EXECUTED on this _____ day of _____, 2013.

CITY OF SACHSE, TEXAS

By: _____
Billy George, City Manager

Approved as to Form:

By: _____
Peter G. Smith, City Attorney
(JJG/02-15-13/59517)

EXECUTED on this _____ day of _____, 2013.

SACHSE BASEBALL ASSOCIATION

By: _____
Name: _____
Title: _____

EXHIBIT A

ATHLETIC COMPLEXES

1. Heritage Park located at 4408 Hudson Street, Sachse, Texas.

2. Salmon Park located 4302 Williford Road, Sachse, Texas.

Sachse City Hall
3815 Sachse Road Building
B
Sachse, Texas 75048

Legislation Details (With Text)

File #:	13-1388	**Version:**	1	**Name:**	Consider a resolution of the City Council of the City of Sachse, Texas, authorizing the purchase of a one-ton chassis cab pickup truck for the Public Works Street Department through the Houston-Galveston Area Council of Governments HGACBuy Cooperative Pu
Type:	Agenda Item			**Status:**	Agenda Ready
File created:	2/21/2013			**In control:**	City Council
On agenda:	3/4/2013			**Final action:**	

Title: Consider a resolution of the City Council of the City of Sachse, Texas, authorizing the purchase of a one-ton chassis cab pickup truck for the Public Works Street Department through the Houston-Galveston Area Council of Governments HGACBuy Cooperative Purchasing Program in the amount not to exceed $22,601.00.

Executive Summary
Resolution providing for authorization to purchase a one-ton truck.

Sponsors:

Indexes:

Code sections:

Attachments: res one-ton truck purchase.pdf

Date	Ver.	Action By	Action	Result

Title
Consider a resolution of the City Council of the City of Sachse, Texas, authorizing the purchase of a one-ton chassis cab pickup truck for the Public Works Street Department through the Houston-Galveston Area Council of Governments HGACBuy Cooperative Purchasing Program in the amount not to exceed $22,601.00.

Executive Summary
Resolution providing for authorization to purchase a one-ton truck.

Background
In the FY 2012-2013 budget, Council approved funds for the purchase of a one-ton pickup truck to replace a 2001 model pickup truck in the Street Department. The 2001 truck has over 105,000 miles and will be sent to auction. The new truck will be purchased through the HGACBuy Cooperative Purchasing Program and purchase price will not exceed the budgeted amount.

Policy Considerations
Replacement of high-mileage truck that is no longer cost-effective to operate.

Budgetary Considerations

powered by Legistar™

A total of $24,000.00 was set aside in the FY 2012-2013 budget for this purchase.

Staff Recommendations
Staff recommends approval of a resolution of the City Council of the City of Sachse, Texas, authorizing the purchase of a one-ton chassis cab pickup truck for the Public Works Street Deparment through the Houston-Galveston Area Council of Governments HGACBuy Cooperative Purchasing Program in the amount not to exceed $22,601.00.

RESOLUTION NO. _____

A RESOLUTION OF THE CITY COUNCIL OF THE CITY OF SACHSE, TEXAS, AUTHORIZING THE PURCHASE OF A ONE-TON CHASSIS CAB PICKUP TRUCK FOR THE PUBLIC WORKS STREET DEPARTMENT THROUGH THE HOUSTON-GALVESTON AREA COUNCIL OF GOVERNMENTS HGACBUY COOPERATIVE PURCHASING PROGRAM IN THE AMOUNT NOT TO EXCEED $22,601.00; AND PROVIDING FOR AN EFFECTIVE DATE.

WHEREAS, the City of Sachse, Texas, pursuant to the authority granted by Chapter 271, Subchapter D, of the Texas Local Government Code, desires to participate in intergovernmental purchasing; and

WHEREAS, the City Council is of the opinion that participation in this program will be highly beneficial to the taxpayers of this City, through the anticipated savings to be realized through the intergovernmental purchase of products including municipal vehicles; and

WHEREAS, funding has been appropriated in the fiscal year 2012-2013 budget for the purchase of a one-ton chassis cab pickup truck for the Public Works Street Department.

NOW, THEREFORE, BE IT RESOLVED BY THE CITY COUNCIL OF THE CITY OF SACHSE, TEXAS, THAT:

SECTION 1. The City Council does hereby approve the use of cooperative purchasing through Houston-Galveston Area Council of Governments HGACBuy Cooperative Purchasing Program to purchase a one-ton chassis cab pickup truck in the amount of $22,600.84 from Sam Pack's Five Star Ford and authorizes the City Manager to execute any documents necessary to complete this transaction.

SECTION 2. This Resolution shall take effect immediately from and after its passage, and it is accordingly so resolved.

DULY RESOLVED AND ADOPTED by the City Council of the City of Sachse, Texas, this the _____ day of _____, 2013.

CITY OF SACHSE, TEXAS

_____

Mike Felix, Mayor

ATTEST:

_____

Terry Smith, City Secretary

Sachse City Hall
3815 Sachse Road Building
B
Sachse, Texas 75048

Legislation Details (With Text)

File #:	13-1393	**Version:**	1	**Name:**	Monthly Revenue and Expenditure Report January 2013
Type:	Agenda Item			**Status:**	Agenda Ready
File created:	2/26/2013			**In control:**	City Council
On agenda:	3/4/2013			**Final action:**	
Title:	Consider receiving the Monthly Revenue and Expenditure Report for the period ending January 31, 2013. Executive Summary The Finance Department will prepare a report each month to update the City Council regarding revenues and expenditures of the City. The attached report is for the month ended January 31, 2013.				
Sponsors:					
Indexes:					
Code sections:					
Attachments:	GF 1-31-2013 Budget Report.pdf UF 1-31-2013 Budget Report.pdf DS 1-31-2013 Budget Report.pdf SEDC 1-31-2013 Budget Report.pdf				

Date	Ver.	Action By	Action	Result

Title
Consider receiving the Monthly Revenue and Expenditure Report for the period ending January 31, 2013.

Executive Summary
The Finance Department will prepare a report each month to update the City Council regarding revenues and expenditures of the City. The attached report is for the month ended January 31, 2013.

Background
Included in this report are unaudited summaries for the General Fund, the Utility Fund, the Sachse Economic Development Corporation, and the Debt Service Fund for the period ending January 31, 2013.

Policy Considerations
City Charter requires that the City Manager submit a report covering revenues and expenditures monthly.

Budgetary Considerations
N/A

powered by Legistar™

Staff Recommendations
Staff recommends that the City Council receive the Monthly Revenue and Expenditure Report for the period ending January 31, 2013 as a Consent Agenda item.

City of Sachse

Monthly Revenue and Expenditure Report

January 31, 2013

(Unaudited)

GENERAL FUND

	Annual Budget	Current Month Actual	Actual YTD	33% of Year Completed YTD Actual as a Percent of Budget	Note Reference 33%
Revenue Summary					
Property Tax	$ 7,036,517	$ 1,975,299	$ 6,408,839	91.08%	**A**
Sales Tax	833,553	57,685	290,878	34.90%	
Franchise Fees	1,444,403	131,110	481,991	33.37%	
Licenses and Permits	323,775	46,742	137,270	42.40%	
Service Fees	434,450	112,834	312,295	71.88%	**B**
Fines	330,000	29,376	101,080	30.63%	
Interest Income	5,000	-	757	15.14%	**C**
Miscellaneous Income	143,097	2,150	51,965	36.31%	**D**
Intergovernmental Revenue	960,271	79,988	319,952	33.32%	
Total Revenue	**$ 11,511,066**	**$ 2,435,184**	**$ 8,105,028**	**70.41%**	
Expenditure Summary					
City Manager	$ 294,468	$ 28,305	$ 104,628	35.53%	
City Secretary	153,366	10,464	47,521	30.99%	
Human Resources	248,104	20,033	70,120	28.26%	
Finance	478,268	26,355	169,274	35.39%	
Municipal Court	166,610	10,838	45,678	27.42%	
Parks & Recreation	737,643	49,605	233,479	31.65%	
Senior Programs	104,312	9,801	34,406	32.98%	
Library Services	291,436	20,840	100,226	34.39%	
Community Development	603,315	44,351	202,503	33.57%	
Streets & Drainage	1,138,483	72,052	280,407	24.63%	
Facility Maintenance	325,081	30,200	96,385	29.65%	
Police	3,170,903	327,488	1,197,244	37.76%	
Animal Control	137,201	10,430	49,117	35.80%	
Fire/EMS	2,209,598	156,207	719,703	32.57%	
Combined Services	1,176,674	57,485	452,392	38.45%	
City Engineer	274,155	12,532	51,900	18.93%	
Total Expenditures	**$ 11,509,617**	**$ 886,987**	**$ 3,854,984**	**33.49%**	
Total Revenue Over/Under Expenses	**$ 1,449**	**$ 1,548,197**	**$ 4,250,044**		

Explanation of Major Variances:

A Property tax collections in the current year are at 91.08% compared to 88.39 in the previous year.

B Developer Fees for the current period are significantly higher than the same time period last year.

C Interest Income is recorded quarterly.

City of Sachse

Monthly Revenue and Expenditure Report

January 31, 2013

(Unaudited)

UTILITY FUND

	Annual Budget	Current Month Actual	Actual YTD	YTD Actual as a Percent of Budget (33% of Year Completed)	Note Reference
Revenue Summary					33%
Water Revenue	$ 4,062,949	$ 155,407	$ 1,191,361	29.32%	
Sewer Revenue	2,974,582	227,736	918,696	30.88%	
Fees	150,900	14,059	66,034	43.76%	**A**
Impact Fees	120,000	6,967	31,422	26.19%	
Interest Income	3,500	-	1,331	38.04%	**B**
Miscellaneous Income	1,200	-	95	7.92%	
Total Revenue	**$ 7,313,131**	**$ 404,170**	**$ 2,208,941**	**30.21%**	
Expenditure Summary					
Utility Administration	$ 250,758	$ 15,930	$ 77,919	31.07%	
Water Operations	3,823,654	282,391	1,173,581	30.69%	
Sewer Operations	2,934,366	197,142	838,725	28.58%	
Meter Reading	121,994	3,305	56,503	46.32%	**C**
Total Expenditures	**$ 7,130,772**	**$ 498,768**	**$ 2,146,729**	**30.11%**	
Total Revenue Over/Under Expenses	**$ 182,359**	**$ (94,599)**	**$ 62,212**		

Explanation of Major Variances:

A Miscellaneous Billing Fees are 4.5% higher than same time in prior year.

B Interest Income is recorded quarterly.

C Purchase of meters to replenish depleted inventory.

Monthly Revenue and Expenditure Report
January 31, 2013
(Unaudited)

Debt Service Fund

	Annual Budget	Current Month Actual	Actual YTD	YTD Actual as a Percent of Budget (33% of Year Completed)	Note Reference
Revenue Summary					33%
Property Tax	$ 2,492,137	$ 700,625	$ 2,274,999	91.29%	**A**
Interest Income	500	-	394	78.75%	**B**
Total Revenue	**$ 2,492,637**	**$ 700,625**	**$ 2,275,393**	**91.28%**	
Expenditure Summary					
Fees	$ 1,000	$ 500	$ 500	50.00%	**C**
Principal	1,035,000	-	-	0.00%	**D**
Interest	1,830,446	-	-	0.00%	**E**
Total Expenditures	**$ 2,866,446**	**$ 500**	**$ 500**	**0.02%**	
Total Revenue Over/Under Expenses	**$ (373,809)**	**$ 700,125**	**$ 2,274,893**		

Notes: Explanation of Major Variances

A Property Tax collections for FY12-13 as of are at 91.29% compared to 89.10% for same time period in prior year.
B Interest Income is recorded quarterly.
C Fees are paid annually.
D Debt principal is paid annually.
E Debt interest is paid biannually.

City of Sachse

Monthly Revenue and Expenditure Report

January 31, 2013

(Unaudited)

SACHSE ECONOMIC DEVELOPMENT CORPORATION

	Annual Budget	Current Month Actual	Actual YTD	YTD Actual as a Percent of Budget (33% of Year Completed)	Note Reference
Revenue Summary					
Sales Tax	$ 410,273	$ 26,790	$ 141,686	34.53%	**A**
Interest Income	7,500	-	3,289	43.85%	**B**
Total Revenue	**$ 417,773**	**$ 26,790**	**$ 144,975**	**34.70%**	
Expenditure Summary					
Expenditures	485,866	19,761	71,538	14.72%	**C**
Total Expenditures	**$ 485,866**	**$ 19,761**	**$ 71,538**	**14.72%**	
Total Revenue Over/Under Expenses	**$ (68,093)**	**$ 7,029**	**$ 73,437**		

Explanation of Major Variances:

A Sales Tax collections for FY12-13 as of January 31 are lower than prior year due to RCC audit adjustment in prior year.

B Interest Income is recorded quarterly.

C Expenditures for FY12-13 as of January 31 are at 14.72% compared to 18.61% for same time period in prior year.

Sachse City Hall
3815 Sachse Road Building
B
Sachse, Texas 75048

Legislation Details (With Text)

File #:	13-1395	**Version:**	1	**Name:**	Discuss Updates to the Family Medical Leave Act (FMLA), Section 7.08 of the Leave Policy.
Type:	Agenda Item			**Status:**	Agenda Ready
File created:	2/28/2013			**In control:**	City Council
On agenda:	3/4/2013			**Final action:**	
Title:	Consider an Ordinance Adopting the amendment to the City of Sachse Employee Leave Policy attached hereto as Exhibit "A". Executive Summary Consider an Ordinance Adopting Revisions to the Employee Policy Manual, Section 7 Leave and Time Off, Section 7.08, Family Medical Leave Act (FMLA), Addendum A.				
Sponsors:					
Indexes:					
Code sections:					
Attachments:	Addendum A Ordinance and FMLA Leave Policy.pdf Family Medical Leave Act Revisions 2 2013.pdf				

Date	Ver.	Action By	Action	Result

Title
Consider an Ordinance Adopting the amendment to the City of Sachse Employee Leave Policy attached hereto as Exhibit "A".

Executive Summary
Consider an Ordinance Adopting Revisions to the Employee Policy Manual, Section 7 Leave and Time Off, Section 7.08, Family Medical Leave Act (FMLA), Addendum A.

Background
The City of Sachse Employee Policy Manual was last updated in May, 2009. With changes in the City Manager and Human Resources Manager positions, this is a good time to begin a new review of the City's policies. Staff will be working to make changes, correct wording and titling issues (changing Human Resources Director to Manager) and make additions and deletions as necessary. Although the bulk of policy changes will be done at once, changes to the FMLA section has changes that need to be made sooner rather than later due to notice requirements for employees.

Policy Considerations
Recommendations for changes to the Family Medical Leave Act (FMLA) better defining when leave may be taken and ensuring sections are in compliance with Federal law. Staff is also recommending to modify the method of counting weeks for measuring the FMLA year for the City of Sachse. Any change in methodology requires giving a 60-day notice to employees.

powered by Legistar™

Budgetary Considerations
There are no budgetary considerations.

Staff Recommendations
Approval of an Ordinance Adopting the amendment to the City of Sachse Employee Leave Policy attached hereto as Exhibit "A", as a consent agenda item.

ORDINANCE NO. _____

AN ORDINANCE OF THE CITY OF SACHSE, TEXAS, ADOPTING THE AMENDMENT TO THE CITY OF SACHSE EMPLOYEE LEAVE POLICY ATTACHED HERETO AS EXHIBIT "A"; PROVIDING A REPEALING CLAUSE; PROVIDING A SEVERABILITY CLAUSE; PROVIDING A SAVINGS CLAUSE; AND PROVIDING AN EFFECTIVE DATE.

WHEREAS, the Home Rule Charter for the City of Sachse requires the personnel rules to be prepared by the City Manager and presented to the City Council for adoption;

WHEREAS, the City Council has reviewed the attached Employee Policy Manual amendment, Section 7 – Leave and Time Off, Section 7.06 Family and Medical Leave Act (FMLA) and determined the need and appropriateness to adopt such Amendment; and

WHEREAS, the City Council desires to adopt the attached Employee Policy Manual amendment effective upon passage of this ordinance.

NOW THEREFORE, BE IT ORDAINED BY THE CITY COUNCIL OF THE CITY OF SACHSE, TEXAS:

SECTION 1. That the City of Sachse Employee Policy Manual amendment attached hereto as Exhibit "A" is hereby adopted as the official employee manual for the City of Sachse.

SECTION 2. That all provisions of the Code of Ordinances of the City of Sachse, Texas, in conflict with the provisions of this ordinance be, and the same are hereby, repealed, and all other provisions not in conflict with the provisions of this ordinance shall remain in full force and effect.

SECTION 3. That should any word, sentence, paragraph, subdivision, clause, phrase or section of this ordinance, or of the Code of Ordinances, as amended hereby, be adjudged or held to be void or unconstitutional, the same shall not affect the validity of the remaining portions of said ordinance or the Code of Ordinances, as amended hereby, which shall remain in full force and effect.

SECTION 4. An offense committed before the effective date of this ordinance is governed by prior law and the provisions of the City of Sachse Code of Ordinances, as amended, in effect when the offense was committed and the former law is continued in effect for this purpose.

SECTION 5. This ordinance shall take effect immediately from and after its passage, and publication of the caption, as the law and charter in such cases provide.

DULY APPROVED AND PASSED by the City Council of the City of Sachse, Texas on the 4th day of March, 2013.

APPROVED:

_____

MIKE FELIX, MAYOR

ATTEST:

_____

TERRY SMITH, CITY SECRETARY

APPROVED AS TO FORM:

_____

PETER G. SMITH, CITY ATTORNEY

(JJG/02-28-13/59647)

SECTION 7.06 FAMILY AND MEDICAL LEAVE ACT (FMLA)

A Family and/or Medical Leave of Absence is defined as an unpaid approved Leave of Absence available to eligible employees for up to 12 weeks per year, under particular circumstances that are critical to the life of a family, and in accordance with the Family Medical Leave Act of 1993.

A. ELIGIBILITY

"Eligible employees" must have worked for the City for at least twelve (12) months, and at least 1250 hours during the year preceding the start of the leave.

B. LEAVE MAY BE TAKEN

1. Upon the birth of an employee's child;

2. Upon the placement of a child with an employee for adoption or foster care, legal ward, or child of a person standing in loco parentis.

Men and women have the same right to take FMLA leave to bond with their child but it must be taken before the end of the first 12 months following the date of the birth or placement.

3. Upon medical certification from a health care provider/physician of the requirements for use of Sick Leave, FMLA may also be taken for these conditions:

   a) When the employee is needed to care for a child, spouse or parent who has a serious health condition.

   b) When the employee is unable to perform the essential functions of his/her position because of a serious health condition.

   c) Any qualifying exigency arising due to the spouse, son, daughter or parent of the employee being on active duty (or having been notified of an impending call or order to active duty) in the Armed Forces in support of a contingency operation. An eligible employee who is the spouse, son, daughter, parent, or next of kin of a covered service member is entitled to a total of 26 workweeks of leave during a 12-month period to care for the service member.

The leave described in this paragraph shall only be available during one single 12-month period.

4. Spouses who are both employed by the City are entitled to a combined total of 12 weeks leave (not 12 weeks each) for the birth, adoption or placement of a child, or to care for a sick parent.

C. PROCEDURES

Employees may take a total of 12 weeks of FMLA leave for the reasons specified above during the 12 month period measured backward from the date the requested leave is to begin, known as the FMLA year.

All accrued paid time, including sick and vacation, will run concurrently with all FMLA leave. Accrued paid time must be exhausted prior to taking unpaid leave.

An employee may also be required to take a fitness-for-duty test prior to returning to work.

The City prohibits any employee utilizing a Leave of Absence for medical reasons to engage in activities that could hinder recovery during that time period. Engaging in such activities may be grounds for disciplinary action, up to and including termination.

D. DEFINITIONS

"FMLA Year" is defined as a twelve (12) month rolling period, measured backward from the date the requested leave is to begin.

"Leave of Absence" for eligible employees is defined as an approved absence for up to 12 weeks of unpaid leave per FMLA year, under particular circumstances.

"Child" is defined as children 18 years or younger and includes a biological, adopted or foster child, stepchild or legal ward. Children 18 years of age or older are included only if they are incapable of self-care because of mental or physical disabilities. To define a mental or physical disability, refer to the Social Security Act Regulations.

"Spouse" is defined as husband or wife as defined or recognized by State law for purposes of marriage, or a common law spouse as recognized by the State of Texas.

"Parent" is defined as a biological parent of an employee, or an individual who stands, or stood in place of a parent when the employee was a child.

"Serious Health Condition" is defined as an illness, injury, impairment, or physical or mental condition that involves either an overnight stay in a medical care facility, or continuing treatment by a health care provider for a condition that either prevents the employee from performing the functions of his/her job, or prevents the qualified member from participating in school or daily activities. Common colds, flu, earaches, headaches, other than migraines, etc. are not serious health conditions.

"Continuing Treatments" are those that may be met with a period of incapacity of more than three (3) consecutive calendar days combined with at least 2 visits to a health care provider, or 1 visit to a health care provider and a regimen of continuous treatments such as prescription medication or therapy, incapacity due to pregnancy or to a chronic condition.

"Needed to Care for" provides physical and/or psychological care. The employee does not need to be the only individual or family member available to provide care, nor is the employee required to provide actual care (e.g., someone else is providing in-patient or home care) as long as the employee is providing at least psychological comfort and reassurance.

"Health Care Provider/Physician" includes doctors of medicine or osteopathy who are authorized by the State in which they practice, or any other person determined by the Family Medical Leave Act to be capable of providing health care services.

"Medical Certification" is defined as certification from a health care provider to support the claim for leave to care for a seriously ill child, spouse or parent, or for an employee's serious health condition.

"Key Employee" is defined as a salaried employee who is among the highest paid 10 percent of all City employees. If reinstatement of a key employee at the conclusion of the leave period would result in substantial and grievous economic injury to the City, reinstatement to the key employee can be denied.

"Health Care Provider (Military Family Leave)" is any one of the following: a United States Department of Defense ("DOD") health care provider a United States Department of Veterans Affairs ("VA") health care provider, a DOD TRICARE network authorized private health care provider, or a DOD non-network TRICARE authorized private health care provider.

E. STATUS OF SERVICE AND BENEFITS

No loss of service with the City will occur as a result of a Leave of Absence while the employee is on Family Medical Leave. No benefit credits, including TMRS contributions, will accrue during an unpaid status of the leave. Employees on unpaid leave will be notified by Human Resources of contribution options with TMRS. It is the employee's responsibility to initiate arrangements with TMRS for contribution payments.

1. During a Leave of Absence, employee health benefits will continue. Therefore the employee must continue to pay any share of his/her employee-paid health benefits premium.

2. Employees are responsible for repayment of any benefit costs paid by the City if they do not return to work, unless failure to return to work was for a verifiable reason beyond the employee's control.

F. INTERMITTENT OR REDUCED LEAVE

1. Leave may be taken on an intermittent or reduced leave schedule if necessary for approved reasons under this policy. The employee must attempt to schedule the leave so as not to disrupt the City's operations.

2. Employees will be required to provide documentation from the health care provider certifying a medical necessity for intermittent leave, and the time and length of the leave requested. The City may require the employee to transfer temporarily to an alternative position (equivalent in pay and benefits) which accommodates recurring periods of absence or to a part-time schedule provided the position has the equivalent rate of pay and benefits.

G. SECOND MEDICAL OPINION

1. The City, at its discretion and its own expense, may require a second medical opinion and periodic re-verification for an employee's Leave of Absence.

2. If the first and second opinions differ, the City, at its own expense, may require the binding opinion of a third health care provider approved jointly by the City and the employee. The City has five (5) business days to provide the employee with a copy of the second/third opinion.

   If the employee refuses to release relevant medical records to the health care provider designated to provide a second or third opinion, the City may deny FMLA leave to the employee.

H. NOTICE

1. When the need for leave is foreseeable such as the birth or adoption of a child, or a planned medical treatment, the employee must provide a 30 day notice to the Department Director or designee and make efforts to schedule leave so as not to disrupt City operations. A request for Family and Medical Leave must be made to Human Resources.

2. In cases of a medical emergency or other unforeseeable events, the employee must give the Department Director and the Human Resources Manager notice of the need for Family and Medical Leave within two (2) business days of when the need for Family and Medical leave becomes known to the employee.

3. If the Human Resources Manager is not informed beforehand that an employee is on leave for one of the qualifying events for FMLA, and the employee has not requested FMLA upon obtaining knowledge of the qualifying event, the Human Resources Manager will immediately place the employee on Family and Medical Leave. The Department Director will also be notified of this placement. The date of the leave may be retroactive to the first day of the qualifying event.

4. An employee must provide the City with medical certification supporting the need for FMLA leave due to a serious health condition affecting the employee or the employee's spouse, child or parent. The certification must set forth the beginning and expecting ending dates of the leave. In the case of intermittent leave, the certification must also provide the dates

and duration of the treatments necessitating the intermittent leave. The Medical Certification Form is given to the employee upon the request of FMLA and must be returned to Human Resources by the employee within 15 days of the beginning date of FMLA. If an employee fails to provide any required certification within 15 days, the City may deny leave until the certification is provided.

The City may contact an employee's health care provider to clarify individually identifiable health information provided in the medical certification. An employee's permission is needed to cure any deficiencies, or if an employee refuses to cure any deficiencies in the certification or does not grant the employer permission to speak to the health care provider, the employee's request for FMLA leave may be denied.

5. The City may request medical recertification periodically in connection with an absence. The employee has the same obligation to cooperate with the City during the recertification process as in the initial certification process.

SECTION 7.06 FAMILY AND MEDICAL LEAVE ACT (FMLA)

A Family and/or Medical Leave of Absence is defined as an unpaid approved Leave of Absence available to eligible employees for up to 12 weeks per year, under particular circumstances that are critical to the life of a family, and in accordance with the Family Medical Leave Act of 1993.

A. ELIGIBILITY

"Eligible employees" must have worked for the City for at least twelve (12) months, and at least 1250 hours during the year preceding the start of the leave.

B. LEAVE MAY BE TAKEN

1. Upon the birth of an employee's child;

2. Upon the placement of a child with an employee for adoption or foster care, legal ward, or child of a person standing in loco parentis.

Men and women have the same right to take FMLA leave to bond with their child but it must be taken before the end of the first 12 months following the date of the birth or placement.

~~For the birth of a child as it applies to a male employee/father, it is presumed that the mother and child are dependents of the male employee/father and are in need of his care. The male employee/father may be entitled to use earned paid sick leave for this purpose, concurrent with this unpaid FMLA leave.~~

~~For the birth of a child to a female employee/mother, it is presumed that the employee is ill and is entitled to take any earned paid sick leave for this purpose. Additional paid sick leave may be taken for the birth of a child, concurrent with use of FMLA leave.~~

3. Upon medical certification from a health care provider/physician of the requirements for use of Sick Leave, FMLA may also be taken for these conditions:

   a) When the employee is needed to care for a child, spouse or parent who has a serious health condition.

b) When the employee is unable to perform the essential functions of his/her position because of a serious health condition.

c) Any qualifying exigency arising due to the spouse, son, daughter or parent of the employee being on active duty (or having been notified of an impending call or order to active duty) in the Armed Forces in support of a contingency operation. An eligible employee who is the spouse, son, daughter, parent, or next of kin of a covered service member is entitled to a total of 26 workweeks of leave during a 12-month period to care for the service member. The leave described in this paragraph shall only be available during one single 12-month period.

4. Spouses who are both employed by the City are entitled to a combined total of 12 weeks leave (not 12 weeks each) for the birth, adoption or placement of a child, or to care for a sick parent.

C. PROCEDURES

Employees may take a total of 12 weeks of FMLA leave for the reasons specified above during the 12 month period measured ~~forward~~ backward from the date the requested leave is to begin ~~from the first date FMLA began~~, known as the FMLA year.

~~Employees may elect, or the City Manager may require an employee entitled to paid leave including sick, vacation, personal holiday, or compensatory leave to take the paid leave first. Such available paid leave will be counted against the FMLA 12-week unpaid leave entitlement. All accrued paid time including sick and vacation, will run concurrently with FMLA leave, and accrued paid time must be exhausted prior to taking unpaid leave.~~All accrued paid time, including sick and vacation, will run concurrently with all FMLA leave. Accrued paid time must be exhausted prior to taking unpaid leave.

An employee may also be required to take a fitness-for-duty test if needed.

The City prohibits any employee utilizing a Leave of Absence for medical reasons to engage in activities that could hinder recovery

during that time period. Engaging in such activities may be grounds for disciplinary action, up to and including termination.

D. DEFINITIONS

"FMLA Year" is defined as a twelve (12) month rolling period, measured ~~forward from the first date EMLA began~~ backward from the date the requested leave is to begin.

"Leave of Absence" for eligible employees is defined as an approved absence for up to 12 weeks of unpaid leave per FMLA year, under particular circumstances.

"Child" is defined as children 18 years or younger and includes a biological, adopted or foster child, stepchild or legal ward. Children 18 years of age or older are included only if they are incapable of self-care because of mental or physical disabilities. To define a mental or physical disability, refer to the Social Security Act Regulations.

"Spouse" is defined as husband or wife as defined or recognized by State law for purposes of marriage, or a common law spouse as recognized by the State of Texas.

"Parent" is defined as a biological parent of an employee, or an individual who stands, or stood in place of a parent when the employee was a child.

"Serious Health Condition" is defined as an illness, injury, impairment, or physical or mental condition that involves either an overnight stay in a medical care facility, or continuing treatment by a health care provider for a condition that either prevents the employee from performing the functions of his/her job, or prevents the qualified member from participating in school or daily activities. Common colds, flu, earaches, headaches, other than migraines, etc. are not serious health conditions.

"Continuing Treatments" are those that may be met with a period of incapacity of more than three (3) consecutive calendar days combined with at least 2 visits to a health care provider, or 1 visit to a health care provider and a regimen of continuous treatments such as prescription medication or therapy, incapacity due to pregnancy or to a chronic condition.

"Needed to Care for" provides physical and/or psychological care. The employee does not need to be the only individual or family

member available to provide care, nor is the employee required to provide actual care (e.g., someone else is providing in-patient or home care) as long as the employee is providing at least psychological comfort and reassurance.

"Health Care Provider/Physician" includes doctors of medicine or osteopathy who are authorized by the State in which they practice, or any other person determined by the Family Medical Leave Act to be capable of providing health care services.

"Medical Certification" is defined as certification from a health care provider to support the claim for leave to care for a seriously ill child, spouse or parent, or for an employee's serious health condition.

"Key Employee" is defined as a salaried employee who is among the highest paid 10 percent of all City employees. If reinstatement of a key employee at the conclusion of the leave period would result in substantial and grievous economic injury to the City, reinstatement to the key employee can be denied.

"Health Care Provider (Military Family Leave)" is any one of the following: a United States Department of Defense ("DOD") health care provider a United States Department of Veterans Affairs ("VA") health care provider, a DOD TRICARE network authorized private health care provider, or a DOD non-network TRICARE authorized private health care provider.

E. STATUS OF SERVICE AND BENEFITS

No loss of service with the City will occur as a result of a Leave of Absence while the employee is on Family Medical Leave. No benefit credits, including TMRS contributions, will accrue during an unpaid status of the leave. Employees on unpaid leave will be notified by Human Resources of contribution options with TMRS. It is the employee's responsibility to initiate arrangements with TMRS for contribution payments.

1. During a Leave of Absence, employee health benefits will continue. Therefore the employee must continue to pay any share of his/her employee-paid health benefits premium.

2. Employees are responsible for repayment of any benefit costs paid by the City if they do not return to work, unless failure to return to work was for a verifiable reason beyond the employee's control.

F. INTERMITTENT OR REDUCED LEAVE

1. Leave may be taken on an intermittent or reduced leave schedule if necessary for approved reasons under this policy. The employee must attempt to schedule the leave so as not to disrupt the City's operations.

2. Employees will be required to provide documentation from the health care provider certifying a medical necessity for intermittent leave, and the time and length of the leave requested. The City may require the employee to transfer temporarily to an alternative position (equivalent in pay and benefits) which accommodates recurring periods of absence or to a part-time schedule provided the position has the equivalent rate of pay and benefits.

G. SECOND MEDICAL OPINION

1. The City, at its discretion and its own expense, may require a second medical opinion and periodic re-verification for an employee's Leave of Absence.

2. If the first and second opinions differ, the City, at its own expense, may require the binding opinion of a third health care provider approved jointly by the City and the employee. The City has five (5) business days to provide the employee with a copy of the second/third opinion.

   If the employee refuses to release relevant medical records to the health care provider designated to provide a second or third opinion, the City may deny FMLA leave to the employee.

H. NOTICE

1. When the need for leave is foreseeable such as the birth or adoption of a child, or a planned medical treatment, the employee must provide 30 days notice to the Department Director or designee and make efforts to schedule leave so as not to disrupt City operations. A request for Family and Medical Leave must be made to Human Resources.

2. In cases of a medical emergency or other unforeseeable events, the employee must give the Department Director and the Human Resources ~~Director~~ Manager notice of the need for Family and Medical Leave within two (2) business days of when

the need for Family and Medical leave becomes known to the employee.

3. If the Human Resources ~~Director~~ Manager is not informed beforehand that an employee is on leave for one of the qualifying events for FMLA, and the employee has not requested FMLA upon obtaining knowledge of the qualifying event, the Human Resources Manager will immediately place the employee on Family and Medical Leave. The Department Director will also be notified of this placement. The date of the leave may be retroactive to the first day of the qualifying event.

4. An employee must provide the City with medical certification supporting the need for FMLA leave due to a serious health condition affecting the employee or the employee's spouse, child or parent. The certification must set forth the beginning and expecting ending dates of the leave. In the case of intermittent leave, the certification must also provide the dates and duration of the treatments necessitating the intermittent leave. The Medical Certification Form is given to the employee upon the request of FMLA and must be returned to Human Resources by the employee within 15 days of the beginning date of FMLA. If an employee fails to provide any required certification within 15 days, the City may deny leave until the certification is provided.

   The City may contact an employee's health care provider to clarify individually identifiable health information provided in the medical certification. An employee's permission is needed to cure any deficiencies, or if an employee refuses to cure any deficiencies in the certification or does not grant the employer permission to speak to the health care provider, the employee's request for FMLA leave may be denied.

5. The City may request medical recertification periodically in connection with an absence. The employee has the same obligation to cooperate with the City during the recertification process as in the initial certification process.

Sachse, Texas

Sachse City Hall
3815 Sachse Road Building
B
Sachse, Texas 75048

Legislation Details (With Text)

File #:	13-1397	**Version:**	1	**Name:**	Consider a resolution of the City Council of the City of Sachse, Texas, approving the terms and conditions of a facilities agreement, by and between the City of Sachse and Oxford Development Holdings, LLC; and providing an effective date.
Type:	Agenda Item			**Status:**	Agenda Ready
File created:	2/28/2013			**In control:**	City Council
On agenda:	3/4/2013			**Final action:**	

Title: Consider a resolution of the City Council of the City of Sachse, Texas, approving the terms and conditions of a facilities agreement, by and between the City of Sachse and Oxford Development Holdings, LLC; and providing an effective date.

Executive Summary
Oxford Development Holdings, LLC is constructing the Glen Carr House of Sachse, a memory care facility located at Bunker Hill Road and Ben Davis Road. In order to serve the facility with water, the developer is required to construct approximately 747 linear feet of waterline along the North Right-of-way line of Bunker Hill Road. To serve the development, an 8 inch waterline is required. However, Sachse's Capital Improvement Plan includes a 12 inch waterline instead of an 8 inch waterline. This facilities agreement would allow for the City's participation in the cost to upsize the waterline from an 8 inch line to a 12 inch line. The City's costs would cover the true cost of the upsizing, not to exceed $21,180.20.

Sponsors:

Indexes:

Code sections:

Attachments:
- Property Description
- Facilities Agreement
- Facilities Agreement - Glenn Carr - Oxford Development Holdings LLC
- Sachse RESO approving Facilities Agreement with Oxford Development Holdings.pdf

Date	Ver.	Action By	Action	Result

Title

Consider a resolution of the City Council of the City of Sachse, Texas, approving the terms and conditions of a facilities agreement, by and between the City of Sachse and Oxford Development Holdings, LLC; and providing an effective date.

Executive Summary

Oxford Development Holdings, LLC is constructing the Glen Carr House of Sachse, a memory care facility located at Bunker Hill Road and Ben Davis Road. In order to serve the facility with water, the developer is required to construct approximately 747 linear feet of waterline along the North Right-of-way line of Bunker Hill Road. To serve the development, an 8 inch waterline is required. However, Sachse's Capital Improvement Plan includes a 12 inch waterline instead of an 8 inch waterline. This facilities agreement would allow for the City's participation in the cost to upsize the waterline from an 8 inch line to a 12 inch line.

powered by Legistar™

The City's costs would cover the true cost of the upsizing, not to exceed $21,180.20.

Background
Oxford Development Holdings, LLC owns property at the intersection of Bunker Hill Road and Ben Davis Road as generally shown on the attached Waterline Location exhibit. The developer plans to construct a new facility at that location including a new building with parking.

In order to serve the new facility with water, a new 747 linear foot waterline must be constructed as shown on the attached location exhibit. The required pipe diameter to meet water needs of the facility is 8 inches. However, the City will eventually need a 12 inch waterline to service development adjacent to the new waterline. The City may fund the additional costs incurred by upsizing the 8 inch waterline to a 12 inch waterline and, in doing so, will save the future cost of constructing a parallel waterline adjacent to an 8 inch waterline. The budget for the upsizing cost is $21,180.20. In the attached facilities agreement, the City would reimburse the developer for the true costs of the upsizing not to exceed $21,180.20.

The City Attorney's office has reviewed the facility agreement and city staff has worked with the developer on all specific terms included in the agreement.

Policy Considerations
This agreement would result a completed section of 12" water line included in the City's Capital Improvements Plan.

Budgetary Considerations
Funds for the upsizing of the waterline will be compensated through a credit towards Water Impact Fees required to be paid to the City of Sachse for the development.

Staff Recommendations
Staff recommends the approval of a resolution of the City Council of the City of Sachse, Texas, approving the terms and conditions of a facilities agreement, by and between the City of Sachse and Oxford Development Holdings, LLC; and providing an effective date.

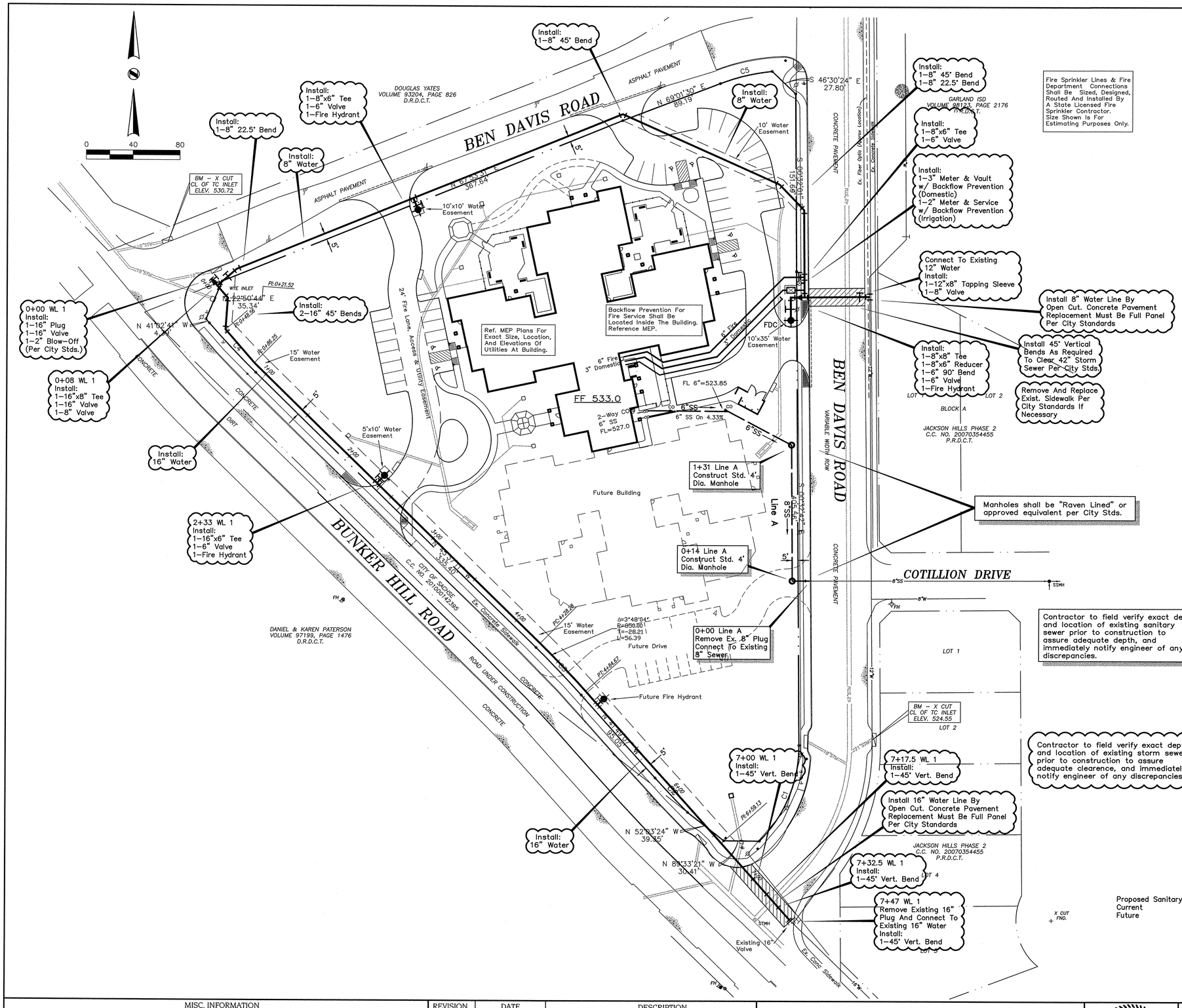

WATER & SANITARY SEWER NOTES

1. Contractor shall notify all utility companies and others who may have buried equipment or pipelines in the vicinity of construction prior to commencing construction. Damage to existing utilities shall be repaired at the contractor's expense.
2. Contractor shall verify the location and depth of tie-in to existing sewer system. IF GRADES NEED REVISING DUE TO UNFORESEEN conflicts, contractor shall notify the engineer prior to laying pipe.
3. Unless otherwise required, all sanitary sewer pipe, manholes, and related appurtenances shall conform to the material and construction specifications as set forth in the City of Sachse standard specifications.
4. Backfill for utility lines shall be carefully placed so that the utility will be stable. Where utility lines cross paved surfaces the top 6" of trench backfill shall be compacted as directed for the subgrade in the surrounding area. Utility ditches shall be visually inspected during construction to ensure no undesirable fill material is used.
5. Special care shall be taken in adhering to those specifications regarding pipe joints, pipe embedment and testing of installed water and sanitary sewer pipes.
6. Sewer pipe shall be pvc sdr 35.
7. Sewer services shall be 6" pvc, sdr 35, and shall be located as shown.
8. Contractor shall meet all o.S.H.A. Requirements regarding trench safety in the construction of this sewer main.
9. Water distribution system material and construction shall conform to the city of sachse standards and specifications.
10. Concrete blocking shall be installed at all bends, valves, and fire hydrants.
11. All mains shall be buried a minimum depth of 42" below top of adjacent curb or as directed by the engineer.
12. Water pipe shall be pvc class 150 (c-900).
13. Contractor shall extend service as shown, provide curb stops as required and meter box set in place.
14. Contractor shall notify all utility companies prior to commencing construction. Damage to existing utilities shall be repaired at contractor's expense.
15. Any damage to adjoining property during construction shall be repaired, to preconstruction conditions or better, at the expense of the contractor.
16. Contractor shall coordinate open cuts in Ben Davis Road with Garland ISD to minimize impact to school traffic. Please contact Jess Hudson at 972-487-4109 prior to start of work.
17. All valves shall be Gate Valves per City Standards.
18. All fittings for waterline shall be AWWA Standard C110. All Bolts and nuts shall be of high-strength, corrosion resistant, low-alloy steel and conform to ASTM A 325 (type 3). All waterline fittings shall be domestically manufactured. The manhole ring and cover shall provide a 30" opening Per TCEQ and City Standards.

Embedment shall be per City standards with the following addition: Filter fabric shall be placed between all granular and native material. Filter fabric shall extend downward at least one foot along trench walls.

CAUTION EXISTING UTILITIES !!!!

All existing utilities and underground facilities that are indicated and shown on these plans are approximate, and are based on as-built plans and/or from reference information. Actual utility locations may differ from the as-built plans based on field observations. All utilities shall be field verified and located prior to any excavation or boring. It shall be the responsibility of the Contractor to verify both horizontally and vertically the location of such existing utilities prior to any construction.

Proposed Sanitary Sewer Flow (per MEP Consultant)

Current	3,708 GPD
Future	7,416 GPD

MISC. INFORMATION

NOTE:

Prior to beginning any construction or construction staking, it shall be the Contractor's responsibility to contact the civil engineer to insure that all parties are in possession of the most current set of construction documents.

REVISION	DATE	DESCRIPTION
	12-18-12	Issue For Permit

RLK ENGINEERING, INC.
111 West Main
Allen, Texas 75013
(972) 359-1733 Off
(972) 359-1833 Fax
Texas Registration No. 579

STATE OF TEXAS — SETH KELLY 91858 — LICENSED PROFESSIONAL ENGINEER — 12-18-12

WATER & SEWER PLAN
GLEN CARR HOUSE OF SACHSE
SACHSE, TEXAS

DESIGNED BY: RLK Engineering	TECH REVIEW: RLK	DRAWING FILE: 12028 WS.dwg	DRAWING SCALE: 1" = 40'	SHEET: C 6 OF 11
DRAWN BY: RLK Engineering	PEER REVIEW: RLK	DRAWING DATE: 12-18-12	PROJECT NUMBER: RLK: 12028	

Dec 17, 2012 - 11:36am User: sethk

OWNER'S CERTIFICATE

STATE OF TEXAS
COUNTY OF DALLAS

WHEREAS, Great American Insurance Company is the owner of a tract of land situated in the Elizabeth Sachse Survey, Abstract No. 1324, and being part of a tract of land conveyed to Great American Insurance Company as recorded in Volume 2004165, Page 4273, Deed Records of Dallas County, Texas, and being more particularly described as follows:

BEGINNING at a capped 1/2" iron rod set for corner at the northeast corner of a corner clip at the intersection of the northeast R.O.W. of Bunker Hill Road and the south R.O.W. of Ben Davis Road, said iron rod also being at the most northerly northeast corner of a tract conveyed to the City of Sachse as recorded in County Clerks No. 201000142395, Dallas County, Texas;

THENCE N67°53'31"E along the south ROW line of said Ben Davis Road a distance of 367.64' to a capped iron rod found for corner;

THENCE N69°01'30"E along the south ROW line of said Ben Davis Road a distance of 89.19' to a capped iron rod found for corner at the beginning of a curve to the right;

THENCE along said curve to the right, along the south ROW of said Ben Davis Road through a central angle of 15°19'23", a radius of 170.00', an arc length of 45.46', and a chord bearing N76°41'11"E, 45.33' to a capped 1/2" iron rod set for corner at the north end of a corner clip;

THENCE S46°30'24"E following the corner clip a distance of 27.80' to a capped 1/2" iron rod set for corner in the west ROW line of Ben Davis Road;

THENCE S00°32'01"E along the west ROW line of said Ben Davis Road a distance of 151.69' to a capped 1/2" iron rod found for corner;

THENCE S00°32'42"E along the west ROW line of said Ben Davis Road a distance of 405.56' to a capped 1/2" iron rod found for corner;

THENCE along said curve to the right, along the west ROW of said Ben Davis Road through a central angle of 45°23'18", a radius of 115.00', an arc length of 91.10', with a chord bearing S22°08'57"W, 88.74' to a capped 1/2" iron rod set for corner;

THENCE N89°33'21"W along the west ROW line of Ben Davis Road a distance of 30.41' to a capped 1/2" iron rod set for corner at the intersection of the northeast ROW line of Bunker Hill Road and the west R.O.W. line of Ben Davis Road;

THENCE N52°03'24"W along the northeast ROW line of Bunker Hill Road a distance of 39.35' to a capped 1/2" iron rod set for corner;

THENCE along said curve to the right along the northeast ROW of Bunker Hill Road through a central angle of 03°04'20", a radius of 755.00' an arc length of 40.48', with a chord bearing N43°21'17"W, 40.48', to a capped 1/2" iron rod set for corner;

THENCE N41°49'07"W along the northeast ROW line of Bunker Hill Road a distance of 95.05' to a capped 1/2" iron rod set for corner;

THENCE along said curve to the left along the northeast ROW line of Bunker Hill Road through a central angle of 03°48'04", a radius of 845.00', an arc length of 56.06', with a chord bearing N43°43'09"W, 56.05', to a capped 1/2" iron rod set for corner;

THENCE N 45°37'11" W along the northeast ROW line of Bunker Hill Road a distance of 335.40' to a capped 1/2" iron rod set for corner;

THENCE along said curve to the right along the northeast ROW of Bunker Hill Road through a central angle of 04°34'30", a radius of 725.82', an arc length of 57.96', with a chord bearing N43°19'56"W, 57.94', to a capped 1/2" iron rod set for corner;

THENCE N41°02'41"W along the northeast ROW line of Bunker Hill Road a distance of 4.39' to a capped 1/2" iron rod set for corner;

THENCE N22°50'44"E along the northeast ROW line of Bunker Hill Road a distance of 35.34' to the POINT OF BEGINNING and containing 189,827 square feet or 4.358 acres of land.

BASIS OF BEARINGS:

Bearings are based on the Final Plat of Seventh Section, Holiday Park Addition, as recorded in Volume 77083, Page 2206, Deed Records of Dallas County, Texas.

NOTICE:
Selling any portion of this addition by metes and bounds is a violation of city subdivision ordinance and state platting statutes, and is subject to fines and withholding of utilities and building certificates.

NOW, THEREFORE, KNOW ALL MEN BY THESE PRESENTS:

THAT, Great American Insurance Company does hereby adopt this plat designating the hereinabove described property as Lot 1, Block A, Glen Carr House of Sachse, an addition to the City of Sachse, Texas, and does hereby dedicate to the public use forever, the streets and alleys shown hereon, and does hereby reserve the easement strips shown on this plat for the mutual use and accommodation of garbage collection agencies, and all public utilities desiring to use or using same. Any public utility shall have the right to remove and keep removed all or parts of any buildings, fences, trees, shrubs or other improvements or growths which in any way endanger or interfere with the construction, maintenance or efficiency of its respective systems on any of these easement strips, and any public utility shall at all times have the right of ingress and egress to or from and upon the said easement strips for the purpose of constructing, reconstructing, inspecting, patrolling, maintaining, reading meters, and adding to or removing all or parts of their respective systems without the necessity at any time of procuring permission from anyone.

This plat approved subject to all platting ordinances, rules, regulations and resolutions of the City of Sachse, Texas.

Witness my hand at _____, this the_____ day of

_____, 2012.

_____
Great American Insurance Company

STATE OF _____
COUNTY OF _____

BEFORE ME, the undersigned authority, a Notary Public in and for said county and state, on this day personally appeared _____ known to me to be the person whose name is subscribed to the foregoing instrument, and acknowledged to me that he executed the same for the purpose and considerations therein expressed.

GIVEN under my hand and seal of office this the_____day of

_____, 2012.

_____
Notary Public in and for State of _____

SURVEYOR'S CERTIFICATE

KNOW ALL MEN BY THESE PRESENTS: THAT I, David J. Surdukan do hereby certify that I have prepared this plat from an actual and accurate survey of the land, and that the corner monuments shown thereon were properly placed under my personal supervision in accordance with the Platting Rules and Regulations of the City planning and zoning commission of the City of Sachse, Texas.

_____
David J. Surdukan
Registration No. 4613

STATE OF TEXAS
REGISTERED
DAVID J. SURDUKAN
4613
PROFESSIONAL
LAND SURVEYOR

PRELIMINARY

STATE OF TEXAS
COUNTY OF COLLIN

BEFORE ME, the undersigned authority, a Notary Public in and for the State of Texas, on this day personally appeared David J. Surdukan, known to me to be the person whose name is subscribed to the foregoing instrument, and acknowledged to me that he executed the same for the purpose and consideration therein expressed and under oath stated that the statements in the foregoing certificate are true.

GIVEN under my hand and seal of office, this the_____day of

_____, 2012.

_____
Notary Public in and for
the State of Texas

APPROVAL OF CITY COUNCIL, CITY OF SACHSE

This Plat, Glen Carr House of Sachse Addition, has been submitted to and considered by the City Council of the City of Sachse, Texas, and is hereby approved by such Council dated this _____ day of _____ , 2012.

Attest by: _____
City Mayor

Attest by: _____
City Secretary

PRELIMINARY PLAT:
For inspection purposes only, and in no way official or approved for record purposes.

SHEET 2 OF 2

PRELIMINARY PLAT

GLEN CARR HOUSE OF SACHSE

BLOCK A, LOT 1

4.358 Acres Situated In The

ELIZABETH SACHSE SURVEY ~ ABST. 1324
SACHSE, DALLAS COUNTY, TEXAS

Owner
Great American Insurance Company
Attn: Chris Linger, Real Estate Manager
301 East Fourth Street 17S
Cincinnati, Ohio 45202
Telephone 513 369-5000

Engineer
RLK Engineering, Inc.
Attn: Seth Kelly
111 West Main Street
Allen, Texas 75013
Telephone 972 359-1733

Surveyor
Surdukan Surveying, Inc.
Attn: David Surdukan
PO Box 126
Anna, Texas 75409
Telephone 972 924-8200

September 18, 2012

STATE OF TEXAS	§	
	§	**FACILITIES AGREEMENT**
COUNTY OF SACHSE	§	

This Agreement ("Agreement") is made by and between the City of Sachse, Texas, a Texas municipal corporation (the "City"), and Oxford Development Holdings, LLC (the "Developer"), (collectively referred to as "Parties" and individually as a "Party"), acting by and through their respective representatives.

RECITALS

WHEREAS, Developer is the owner of real property in Sachse, Texas, and being further described in Exhibit "A" (the "Property"); and

WHEREAS, the City desires to improve the City's waterworks system by the installation of a sixteen (16)-inch water line in accordance with the City's Water Master Plan that will serve the Developer's Property and adjoining properties within the City and Developer agrees to install such water line; and

WHEREAS, the City agrees to reimburse Developer through a credit against Impact Fees for the difference in the actual costs attributed to the upsizing of the line from an eight (8)-inch to a twelve (12)-inch water line; and

WHEREAS, upon Developer's installation and dedication of the Water Line to the City, City shall be responsible for the maintenance of the Water Line;

NOW, THEREFORE, in consideration of the covenants and conditions contained in this Agreement, the City and Developer agree as follows:

Article I
Term

1.1 The term of this Agreement shall commence on the last date of execution hereof (the "Effective Date") and shall continue until the Parties have fully satisfied their respective obligations under this Agreement unless sooner terminated as provided herein.

1.2 This Agreement may be terminated by the mutual written agreement of the Parties. The City may terminate this Agreement if Developer breaches any of the terms and conditions of this Agreement, and such breach is not cured by such party within sixty (60) days after receipt of notice thereof.

Article II
Definitions

For purposes of this Agreement, each of the following terms shall have the meaning set forth herein unless the context clearly indicates otherwise:

"City" shall mean the City of Sachse, Texas.

"City Engineer" shall mean the City Engineer of Sachse, Texas.

"Commencement of Construction" shall mean that (i) the plans have been prepared and all approvals thereof required by applicable governmental authorities have been obtained. (ii) all necessary permits for the construction of the Improvements have been issued by all applicable governmental authorities; (iii) the contract for the construction of the Improvements has been awarded by the Developer; and (iv) the construction of the Improvements have commenced.

"Completion of Construction" shall mean (i) the construction of the Improvements have been substantially completed in accordance with the Approved Plans; and (ii) the Improvements have been accepted by the City in writing.

"Effective Date" shall mean the last date of execution hereof by Developer and City.

"Developer" shall mean Oxford Development Holdings, LLC.

"Impact Fees" shall mean water impact fees.

"Improvements" shall mean the Water Line.

"Water Line" shall mean a twelve (12)-inch water line approximately 747 linear feet in length to be constructed along Bunker Hill Road from Old Ben Davis Road to the easterly side of New Ben Davis Road as depicted in Exhibit "B."

Article III
Waterline Improvements

Construction of Water Line. Developer agrees to design and install the Water Line in accordance with the applicable standards, ordinances and regulations adopted by the City and Approved Plans ("City Standards"'). Developer shall submit plans for the alignment, design and construction (the "Approved Plans") of the Water Line to City for review and approval by the City Engineer. The Approved Plans shall include an estimated cost of design and construction of the Water Line. Subject to extensions for delays caused by events of Force Majeure, Developer agrees to cause Commencement of Construction of the Water Line within ninety (90) days after the later of the date all necessary and required easements or rights-of-way have been acquired, in the reasonable opinion of Developer, and the Approved Plans for the Water Line have been approved by the City.

Article IV
Compensation

City's Cost Participation for Water Line Improvement. Upon Completion of Construction of the Water Line, the City agrees to provide a credit against Water Impact Fees assessed against

the Property, if any, for the difference in the actual costs between the installation of an eight (8)-inch waterline and the Water Line (the "Credit"), not to exceed a total credit of twenty-one thousand one-hundred eighty dollars and twenty cents ($21,180.20).

Article V
Notice

Any notice to be given or to be served upon a Party hereto in connection with this Agreement must be in writing and may be given by certified or registered mail and shall be deemed to have been given and received when a certified or registered letter containing such notice, properly addressed with postage prepaid, is deposited in the United States mail, and if given otherwise than by certified or registered mail, it shall be deemed to have been given and delivered to and received by the Party (or such Party's agent or representative) to whom it is addressed when actually received by the intended recipient. Such notice shall be given to the Parties hereto at the address set forth below. Any Party hereto may, at any time by giving two (2) days written notice to the other Party, designate any other address in substitution of the foregoing address to which such notice shall be given.

If Notice to Developer:
Attn: _____
Oxford Development Holdings, LLC
125 N. Market Street, Suite 1416
Wichita, Kansas 67202

If Notice to the City:
Attn: City Manager
City of Sachse, Texas
3815 Sachse Road
Sachse, Texas 75048

With a Copy to:
Peter G. Smith
Nichols, Jackson, Dillard, Hager & Smith
500 N. Akard, Suite 1800
Dallas, Texas 75201

Article VI
Indemnification

DEVELOPER HEREBY RELEASES, RELINQUISHES AND DISCHARGES AND, AT ITS SOLE COST AND EXPENSE, SHALL INDEMNIFY, PROTECT, SAVE HARMLESS AND DEFEND CITY, ITS SUBSIDIARIES, DIVISIONS AND AFFILIATES, THEIR SUCCESSORS OR ASSIGNS, AND THEIR DIRECTORS, OFFICERS AND EMPLOYEES, OF AND FROM ANY AND ALL CLAIMS, DEMANDS, ACTIONS, CAUSES OF ACTION, DAMAGES, LIABILITIES AND COSTS, INCLUDING REASONABLE ATTORNEYS' FEES, OF ANY NATURE

WHATSOEVER, FOR ANY LOSS, DAMAGE OR INJURY TO, INCLUDING THE DEATH OF, PERSONS (WHETHER THEY BE THIRD PERSONS OR EMPLOYEES OF EITHER DEVELOPER OR THE CITY) OR CASUALTY TO PROPERTY (WHETHER IT BE THAT OF THIRD PERSONS OR OF EITHER DEVELOPER OR THE CITY) CAUSED BY, GROWING OUT OF OR HAPPENING IN CONNECTION WITH ANY AND ALL ACTS OR OMISSIONS OF THE DEVELOPER, ITS CONTRACTORS OR SUBCONTRACTORS, IN THE CONSTRUCTION OF THE IMPROVEMENTS. THIS INDEMNITY SHALL INCLUDE AND BE APPLICABLE TO ANY AND ALL ACTIONS, LIABILITIES AND COSTS, AS DESCRIBED ABOVE, ASSERTED UNDER ANY AND ALL FEDERAL, STATE AND LOCAL LAWS, STATUTES, ORDINANCES, RULES AND REGULATIONS COVERING THE ENVIRONMENT OR NUISANCE.

Article VII
Insurance

Developer agrees to maintain comprehensive general liability and contractual liability insurance with minimum limits of two million dollars ($2,000,000.00) per occurrence, four million dollars ($4,000,000.00) aggregate. Developer shall provide automobile liability coverage in the amount of one million dollars ($1,000,000.00) combined single limit. In addition, Developer shall provide or require minimum statutory worker's compensation coverage for all covered employees. A Certificate of Insurance and copies of policy endorsements shall be provided to the City by Developer, reasonably satisfactory to the City in form and content, evidencing that all required coverage is in force and has been endorsed to provide that no policy will be canceled or materially altered without first giving the City thirty (30) days' prior written notice. The commercial general liability policy will name the City as additional insured and, to the fullest extent allowed under law, shall contain a waiver of subrogation in favor of the City. All policies shall be primary to any insurance or self-insurance the City may maintain for acts or omissions of Developer or anyone for whom Developer is responsible. Any deductible or self-insured retention on the required insurance shall be the responsibility of Developer. Developer will include copies of relevant endorsements or policy provisions with the required Certificate of Insurance. Nothing contained in this Section limits Developer's liability to the City to the limits of insurance certified or carried by Developer. If Developer utilizes subcontractors in performance of this Agreement, the subcontractors must meet the same insurance requirements as the Developer. If a subcontractor does not meet the coverage requirements of this Section, the subcontractor must either supplement the deficient areas of coverage or Developer must certify that Developer has acquired sufficient coverage to supplement the deficiency of subcontractor.

Article VIII
Miscellaneous

8.1 Governing Law. The Agreement shall be governed by the laws of the State of Texas, without giving effect to any conflicts of law rule or principle that might result in the application of the laws of another jurisdiction; and exclusive venue for any action concerning

this Agreement shall be in the State District Court of Dallas County, Texas. The Parties agree to submit to the personal and subject matter jurisdiction of said court.

8.2 Legal Construction/Savings/Severability. In case any one or more provisions contained in this Agreement shall be for any reason held invalid, illegal, or unenforceable in any respect, such invalidity, illegality, or unenforceability shall not affect any other provision hereof, and it is the intention of the Parties to this Agreement that in lieu of each provision that is found to be illegal, invalid, or unenforceable, a provision be added to this Agreement which is legal, valid, and enforceable and is as similar in terms as possible to the provision found to be illegal, invalid, or unenforceable.

8.3 Authority. Each of the Parties represents and warrants to the other that they have the full power and authority to enter into and fulfill the obligations of this Agreement. The City represents and warrants that this Agreement has been approved by the City Council of the City in accordance with all applicable public meeting and public notice requirements (including, but not limited to, notices required by the Texas Open Meetings Act) and that the individual executing this Agreement on behalf of the City has been authorized to do so. Developer represents and warrants that this Agreement has been approved on behalf of Developer and that the individual executing this Agreement on behalf of Developer has been authorized to do so.

8.4 Entire Agreement. This Agreement contains the entire agreement of the Parties with respect to the matters contained herein and may not be modified or terminated except upon the provisions hereof or by the mutual written agreement of the Parties to this Agreement.

8.5 Consideration. This Agreement is executed by the Parties hereto without coercion or duress and for substantial consideration, the sufficiency of which is forever confessed.

8.6 Representations. Each signatory represents this Agreement has been read by the Party for which this Agreement is executed, and that such Party has had an opportunity to confer with it legal counsel.

8.7 Recitals. The recitals to this Agreement are incorporated herein.

8.8 Exhibits. All exhibits to this Agreement are incorporated herein.

8.9 Counterparts. This Agreement may be executed in any number of counterparts, each of which shall be deemed an original and constitute one and the same instrument.

8.10 Miscellaneous Drafting Provisions. This Agreement shall be deemed drafted equally by all Parties hereto. The language of all parts of this Agreement shall be construed as a whole according to its fair meaning, and any presumption or principle that the language herein is to be construed against any Party shall not apply. Headings in this Agreement are for the convenience of the Parties and are not intended to be used in construing this document.

8.11 Binding Effect. This Agreement will be binding upon and inure to the benefit of the Parties hereto and their respective heirs, executors, administrators, legal representatives, and

authorized assigns. This Agreement only inures to the benefit of, and may only be enforced by Developer and the City. No other person or entity is a third-party beneficiary of this Agreement.

8.12 Governmental Powers; Waiver of Immunity. By its execution of this Agreement, the City does not waive or surrender any of its governmental powers, immunities, or rights except as to the enforcement of this Agreement.

8.13 No Joint Venture. It is acknowledged and agreed by the Parties that the terms hereof are not intended to and shall not be deemed to create a partnership or joint venture among the Parties, nor to cause City to be deemed to be a constituent partner of the Developer.

8.14 Survival of Covenants. Any of the representations, warranties, covenants, and obligations of the Parties, as well as any rights and benefits of the Parties, pertaining to a period of time following the termination of this Agreement shall survive termination.

8.15 Covenants Running with the Property. The provisions of this Agreement are hereby declared covenants running with the Property, and are fully binding on the Developer and each and every subsequent owner of all or any portion of the Property, but only during the term of such Party's ownership thereof (except with respect to defaults that occur during the term of such person's ownership) and shall be binding on all successors, heirs, and assigns of the Developer which acquire any right, title, or interest in or to the Property, or any part thereof. Any person who acquires any right, title, or interest in or to the Property, or any part hereof, thereby agrees and covenants to abide by and fully perform the provisions of this Agreement with respect to the right, title or interest in such Property.

(signature page to follow)

EXECUTED on this _____ day of _____, 2013.

CITY OF SACHSE, TEXAS

By:_____
Billy George, City Manager

Approved as to Form:

By: _____
Peter G. Smith, City Attorney

EXECUTED on this 15 day of FEBRUARY, 2013.

OXFORD DEVELOPMENT HOLDINGS, LLC

By:_____
Name: R PATRICK AGRAS
Title: PRESIDENT

City Acknowledgment

The State of Texas §
§
County of Dallas §

The foregoing instrument was acknowledged before me this _____ day of _____, 2013, by Billy George, City Manager of the City of Sachse, Texas, a municipal corporation existing under the laws of the State of Texas, in such capacity and on behalf of such municipal corporation.

_____
Notary Public – State of Texas
My commission expires:_____

Developer Acknowledgment

The State of KS §
§
County of Sedgwick §

This instrument was acknowledged before me on the 15 day of February, 2013, by _____, _____ of Oxford Development Holdings, LLC, on behalf of said entity.

Jane L Hornback
Notary Public – State of _____
My commission expires:_____

JANE L. HORNBACK
NOTARY PUBLIC
STATE OF KANSAS
My Appt. Exp. 10-11-15

EXHIBIT A
LEGAL DESCRIPTION OF PROPERTY

STATE OF TEXAS
COUNTY OF DALLAS

WHEREAS, Great American Insurance Company is the owner of a tract of land situated in the Elizabeth Sachse Survey, Abstract No. 1324, and being part of a tract of land conveyed to Great American Insurance Company as recorded in Volume 2004165, Page 4273, Deed Records of Dallas County, Texas, and being more particularly described as follows:

BEGINNING at a capped 1/2" iron rod set for corner at the northeast corner of a corner clip at the intersection of the northeast R.O.W. of Bunker Hill Road and the south R.O.W. of Ben Davis Road, said iron rod also being at the most northerly northeast corner of a tract conveyed to the City of Sachse as recorded in County Clerks No. 201000142395, Dallas County, Texas;

THENCE N67°53'31"E along the south ROW line of said Ben Davis Road a distance of 367.64' to a capped iron rod found for corner;

THENCE N69°01'30"E along the south ROW line of said Ben Davis Road a distance of 89.19' to a capped iron rod found for corner at the beginning of a curve to the right;

THENCE along said curve to the right, along the south ROW of said Ben Davis Road through a central angle of 15°19'23", a radius of 170.00', an arc length of 45.46', and a chord bearing N76°41'11"E, 45.33' to a capped 1/2" iron rod set for corner at the north end of a corner clip;

THENCE S46°30'24"E following the corner clip a distance of 27.80' to a capped 1/2" iron rod set for corner in the west ROW line of Ben Davis Road;

THENCE S00°32'01"E along the west ROW line of said Ben Davis Road a distance of 151.69' to a capped 1/2" iron rod found for corner;

THENCE S00°32'42"E along the west ROW line of said Ben Davis Road a distance of 405.56' to a capped 1/2" iron rod found for corner;

THENCE along said curve to the right, along the west ROW of said Ben Davis Road through a central angle of 45°23'18", a radius of 115.00', an arc length of 91.10', with a chord bearing S22°08'57"W, 88.74' to a capped 1/2" iron rod set for corner;

THENCE N89°33'21"W along the west ROW line of Ben Davis Road a distance of 30.41' to a capped 1/2" iron rod set for corner at the intersection of the northeast ROW line of Bunker Hill Road and the west R.O.W. line of Ben Davis Road;

THENCE N52°03'24"W along the northeast ROW line of Bunker Hill Road a distance of 39.35' to a capped 1/2" iron rod set for corner;

THENCE along said curve to the right along the northeast ROW of Bunker Hill Road through a central angle of 03°04'20", a radius of 755.00' an arc length of 40.48', with a chord bearing N43°21'17"W, 40.48', to a capped 1/2" iron rod set for corner;

THENCE N41°49'07"W along the northeast ROW line of Bunker Hill Road a distance of 95.05' to a capped 1/2" iron rod set for corner;

THENCE along said curve to the left along the northeast ROW line of Bunker Hill Road through a central angle of 03°48'04", a radius of 845.00', an arc length of 56.06', with a chord bearing N43°43'09"W, 56.05', to a capped 1/2" iron rod set for corner;

THENCE N 45°37'11" W along the northeast ROW line of Bunker Hill Road a distance of 335.40' to a capped 1/2" iron rod set for corner;

THENCE along said curve to the right along the northeast ROW of Bunker Hill Road through a central angle of 04°34'30", a radius of 725.82', an arc length of 57.96', with a chord bearing N43°19'56"W, 57.94', to a capped 1/2" iron rod set for corner;

THENCE N41°02'41"W along the northeast ROW line of Bunker Hill Road a distance of 4.39' to a capped 1/2" iron rod set for corner;

THENCE N22°50'44"E along the northeast ROW line of Bunker Hill Road a distance of 35.34' to the POINT OF BEGINNING and containing 189,827 square feet or 4.358 acres of land.

EXHIBIT B
DEPICTION ON WATERLINE

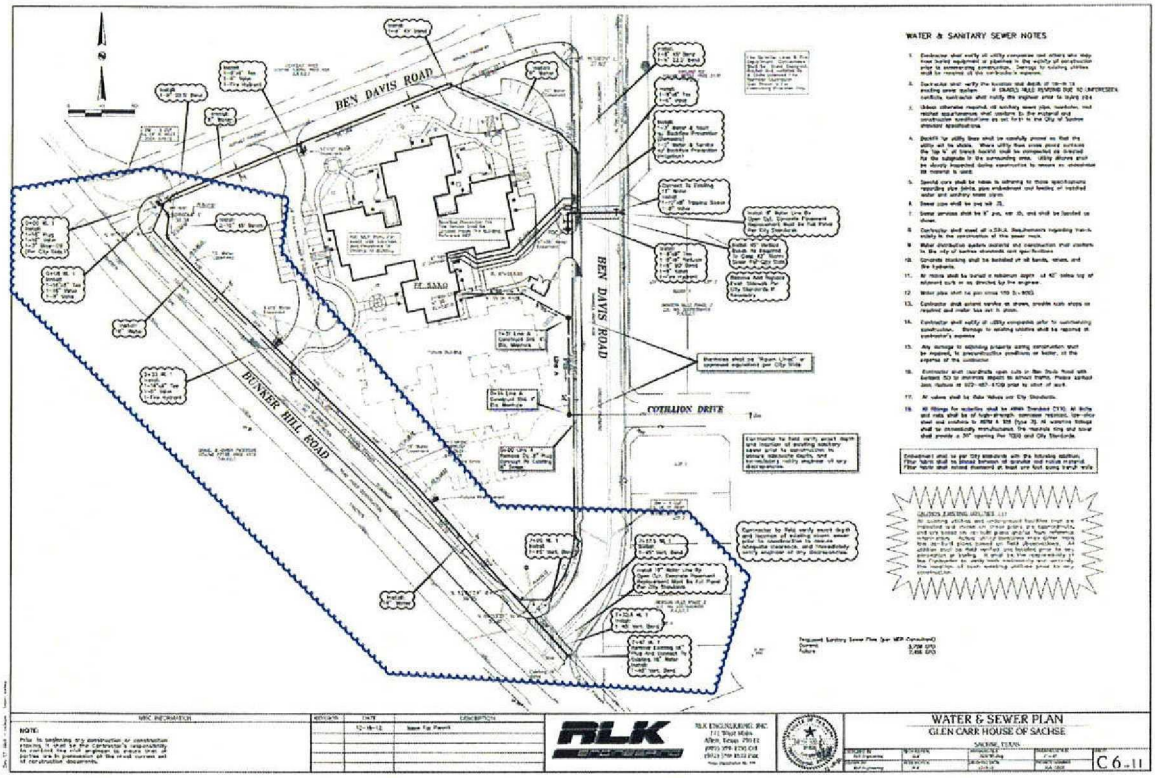

RESOLUTION NO. ____

A RESOLUTION OF THE CITY COUNCIL OF THE CITY OF SACHSE, TEXAS, APPROVING THE TERMS AND CONDITIONS OF THE FACILITIES AGREEMENT BETWEEN THE CITY OF SACHSE, TEXAS, AND OXFORD DEVELOPMENT HOLDINGS, LLC; AUTHORIZING ITS EXECUTION BY THE CITY MANAGER; AND PROVIDING FOR AN EFFECTIVE DATE.

WHEREAS, the City Council has been presented with a proposed Facilities Agreement (herein the "Agreement") between the City of Sachse, Texas, and Oxford Development Holdings, LLC for the installation of a waterline to be constructed along Bunker Hill Road from Old Ben Davis Road to the easterly side of New Ben Davis Road, and being further described in Exhibit "A" attached hereto; and

WHEREAS, upon full review and consideration of the Agreement, and all matters related thereto, the City Council is of the opinion and finds that the terms and conditions thereof should be approved, and that the City Manager should be authorized to execute the Agreement on behalf of the City of Sachse, Texas;

NOW, THEREFORE, BE IT RESOLVED BY THE CITY COUNCIL OF THE CITY OF SACHSE, TEXAS, THAT:

SECTION 1. The term, provisions, and conditions of the Facilities Agreement, a copy of which is attached hereto as Exhibit "A", be and the same are hereby approved.

SECTION 2. The City Manager is hereby authorized to execute the Facilities Agreement on behalf of the City, and any amendments or other instruments related thereto.

SECTION 3. This Resolution shall take effect immediately from and after its passage, and it is, accordingly, so resolved.

DULY RESOLVED AND ADOPTED by the City Council of the City of Sachse, Texas, this ____ day of March, 2013.

CITY OF SACHSE, TEXAS

_____

Mike Felix, Mayor

ATTEST:

_____

Terry Smith, City Secretary

APPROVED AS TO FORM:

Peter G Smith

_____

Peter G. Smith, City Attorney
(PGS:3-1-13:TM 59662)

Exhibit "A"
Facilities Agreement

(to be attached)

Sachse City Hall
3815 Sachse Road Building
B
Sachse, Texas 75048

Legislation Details (With Text)

File #:	13-1401	**Version:**	1	**Name:**	City Council Staff Meeting - Human Resources
Type:	Agenda Item			**Status:**	Agenda Ready
File created:	2/28/2013			**In control:**	City Council
On agenda:	3/4/2013			**Final action:**	
Title:	Staff Briefing: Human Resources. Executive Summary Each month a briefing is given to City Council providing an update of recent actions and events for a specific department. This month the Human Resources Department will brief the council.				
Sponsors:					
Indexes:					
Code sections:					
Attachments:	HR Staff Briefing Handout.pdf				

Date	Ver.	Action By	Action	Result

Title
Staff Briefing: Human Resources.

Executive Summary
Each month a briefing is given to City Council providing an update of recent actions and events for a specific department. This month the Human Resources Department will brief the council.

Background
Each month a briefing is given to City Council providing an update of recent actions and events for a specific department. This month the Human Resources Department will brief the council.

Policy Considerations
None

Budgetary Considerations
None

Staff Recommendations
None Required.

powered by Legistar™

City of Sachse

Human Resources Update 2013

Year to Date Highlights 10/1/2012 - 2/28/2013

- New Hires-13
- Applications Received-999
- Worker's Compensation Claims-5
- Employees who have left the City-9
  - Voluntary-5
  - Involuntary-0
  - Part-time/Seasonal/Temp-0
  - Retirement-4

Key Positions Hired Year to Date

- City Engineer
- Accountant

Year to Date Turnover

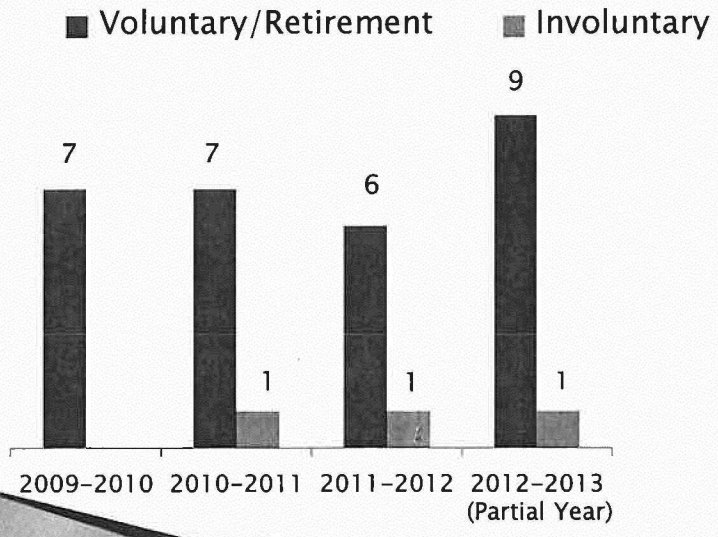

Annual Turnover

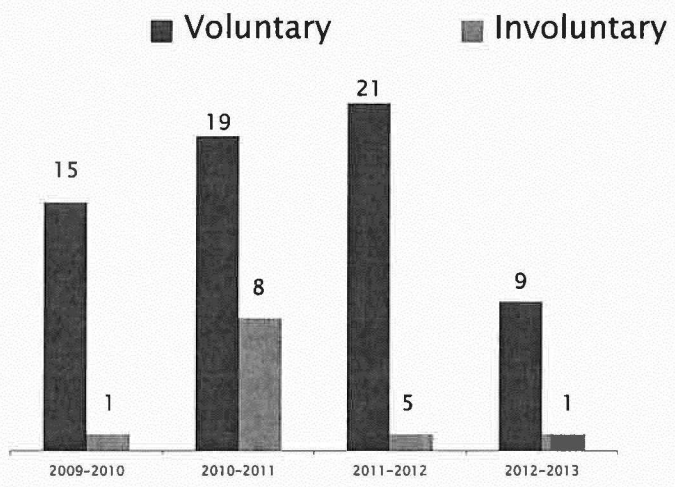

HR in the Future

- Quarterly Reporting
- Continue to Improve Timely and Accurate Communication with Employees
- Involve Employee Input in Decision-Making Process

HR in the Future

- Value Employees
  - Fairness and Consistency in Policies and Practices
  - Work with Departments to Ensure Ongoing Dialog with Employees Regarding Performance
  - Develop Leaders, Managers, and Employees
- Ensure a Respectful Workplace
- Ensure an Environment of Trust

Sachse City Hall
3815 Sachse Road Building
B
Sachse, Texas 75048

Legislation Details (With Text)

File #:	13-1365	**Version:**	1	**Name:**	Presentation of CAFR
Type:	Agenda Item			**Status:**	Agenda Ready
File created:	2/7/2013			**In control:**	City Council
On agenda:	3/4/2013			**Final action:**	
Title:	Consider receiving the City's Comprehensive Financial Report (CAFR) for the fiscal year ending September 30, 2012. Executive Summary Brooks, Cardiel & Company, PLLC, an independent audit firm, has audited the City's Financial Statements for the period ending September 30, 2012 and has issued an unqualified or "clean" opinion. Mike Brooks, CPA will be present to make comments and answer questions.				
Sponsors:					
Indexes:					
Code sections:					
Attachments:					

Date	Ver.	Action By	Action	Result

Title
Consider receiving the City's Comprehensive Financial Report (CAFR) for the fiscal year ending September 30, 2012.

Executive Summary
Brooks, Cardiel & Company, PLLC, an independent audit firm, has audited the City's Financial Statements for the period ending September 30, 2012 and has issued an unqualified or "clean" opinion. Mike Brooks, CPA will be present to make comments and answer questions.

Background
In accordance with Charter provisions (Section 7.18) an independent auditor has audited the City's Financial Statements for the period ending September 30, 2012. An audit is composed of the auditor's opinion, the organization's financial statements, notes to the financial statements, and supporting schedules. It is the auditor's primary function to express an opinion on the financial statements of the organization.

While the auditor is responsible for his/her opinion, the organization itself has the primary responsibility for the remaining information presented (i.e., the financial statements, supporting schedules and notes). Management is responsible for the information presented in the financial statements.

A letter of transmittal is included and is designed to complement the Management's

Discussion and Analysis (MD&A). The MD&A can be found immediately following the independent auditor's report and provides a narrative introduction, overview and analysis of the financial statements. The following are a few major highlights:

Cash and investments (city-wide) are $25,161,408
Unrestricted reserves (primary government) are $6,416,155
Increase in total net assets (primary government) is $4,951,329
Governmental fund balances total $15,826,718
Unassigned General fund balance is $3,490,845, which is 34% of annual expenditures
Unrestricted net assets of the Utility Fund are $3,456,286
City-wide outstanding debt at September 30, 2012 was $40,325,000
Ratio of debt to assessed value is 3.17%
Debt per capita equals $1,906.

Policy Considerations
The City's Financial Statements have been prepared in conformity with Generally Accepted Accounting Principles (GAAP) as applied to governmental entities. It is the responsibility of the Finance Department to present financial information fairly in all material respects so that the financial position of the City is not compromised. The desired result of the independent audit is to receive an "unqualified opinion." The current report reflects an unqualified (clean) opinion which is the highest opinion available. An unqualified opinion states that the financial statements "present fairly, in all material respects, the respective financial position of the governmental activities, the business-type activities, the discretely presented component unit, each major fund, and the aggregate remaining fund information of the City of Sachse, as of September 30, 2012, and the respective changes in financial position and cash flows, where applicable, thereof for the year then ended in conformity with accounting principles generally accepted in the United State of America."

Budgetary Considerations
None

Staff Recommendations
Staff recommends that City Council receive the City's Comprehensive Annual Financial Report (CAFR) for the fiscal year ending September 30, 2012.

Sachse City Hall
3815 Sachse Road Building
B
Sachse, Texas 75048

Legislation Details (With Text)

File #:	13-1389	**Version:**	1	**Name:**	CD - ENCLAVE PP CC
Type:	Agenda Item			**Status:**	Agenda Ready
File created:	2/22/2013			**In control:**	City Council
On agenda:	3/4/2013			**Final action:**	

Title: Consider the application of Ms. Janis Tillerson for approval of a Preliminary Plat for The Enclave, being 24 single-family residential lots on approximately 9.9768 acres, located on the southeast corner of Woodbridge Parkway and Laurel Crest Lane.

Executive Summary
The applicant is requesting to subdivide an approximately 9.9768-acre tract to consist of 24 single-family residential lots, located on the southeast corner of Woodbridge Parkway and Laurel Crest Lane.

Sponsors:

Indexes:

Code sections:

Attachments: CD - ENCLAVE PP CC - ATTACHMENT 1.pdf
CD - ENCLAVE PP CC - ATTACHMENT 2.pdf

Date	Ver.	Action By	Action	Result

Title
Consider the application of Ms. Janis Tillerson for approval of a Preliminary Plat for The Enclave, being 24 single-family residential lots on approximately 9.9768 acres, located on the southeast corner of Woodbridge Parkway and Laurel Crest Lane.

Executive Summary
The applicant is requesting to subdivide an approximately 9.9768-acre tract to consist of 24 single-family residential lots, located on the southeast corner of Woodbridge Parkway and Laurel Crest Lane.

Background
The 9.9768-acre (approximately 434,588 square feet) subject property is located on southeast corner of Woodbridge Parkway and Laurel Crest Lane. (See Attachment 1 - Location Map)

The applicant is proposing to subdivide the subject property into 24 single-family residential lots. The proposed subdivision will have two access points from Woodbridge Parkway, which is a minor arterial thoroughfare on the City's Thoroughfare Plan. The subject property retains a zoning designation R-10 Single-Family Dwelling District. The R-10 zoning designation for this property was approved via Ordinance 3438 on December 3, 2012.

Planning and Zoning Commission approved the Preliminary Plat by a vote of 3-1 at the

powered by Legistar™

February 25, 2013 meeting. The discussion primarily entailed drainage concerns and avoiding issues associated with building pad sites being located in close proximity to the existing pond.

Policy Considerations
The proposed Preliminary Plat meets the standards of the City of Sachse Code of Ordinances and is designed in accordance with the zoning of the property.

The Preliminary Plat has been reviewed by the City Engineer and has been found to be in compliance with the City of Sachse Code of Ordinances.

Budgetary Considerations
None.

Staff Recommendations
Staff recommends approval of the approval of a Preliminary Plat for The Enclave, being 24 single-family residential lots on approximately 9.9768 acres, located on the southeast corner of Woodbridge Parkway and Laurel Crest Lane.

ATTACHMENT 1

N

0 150 300 600 Feet

AERIAL LOCATION MAP

The Enclave
Preliminary Plat (13-01)
Map Created: February 21, 2013

[redacted]

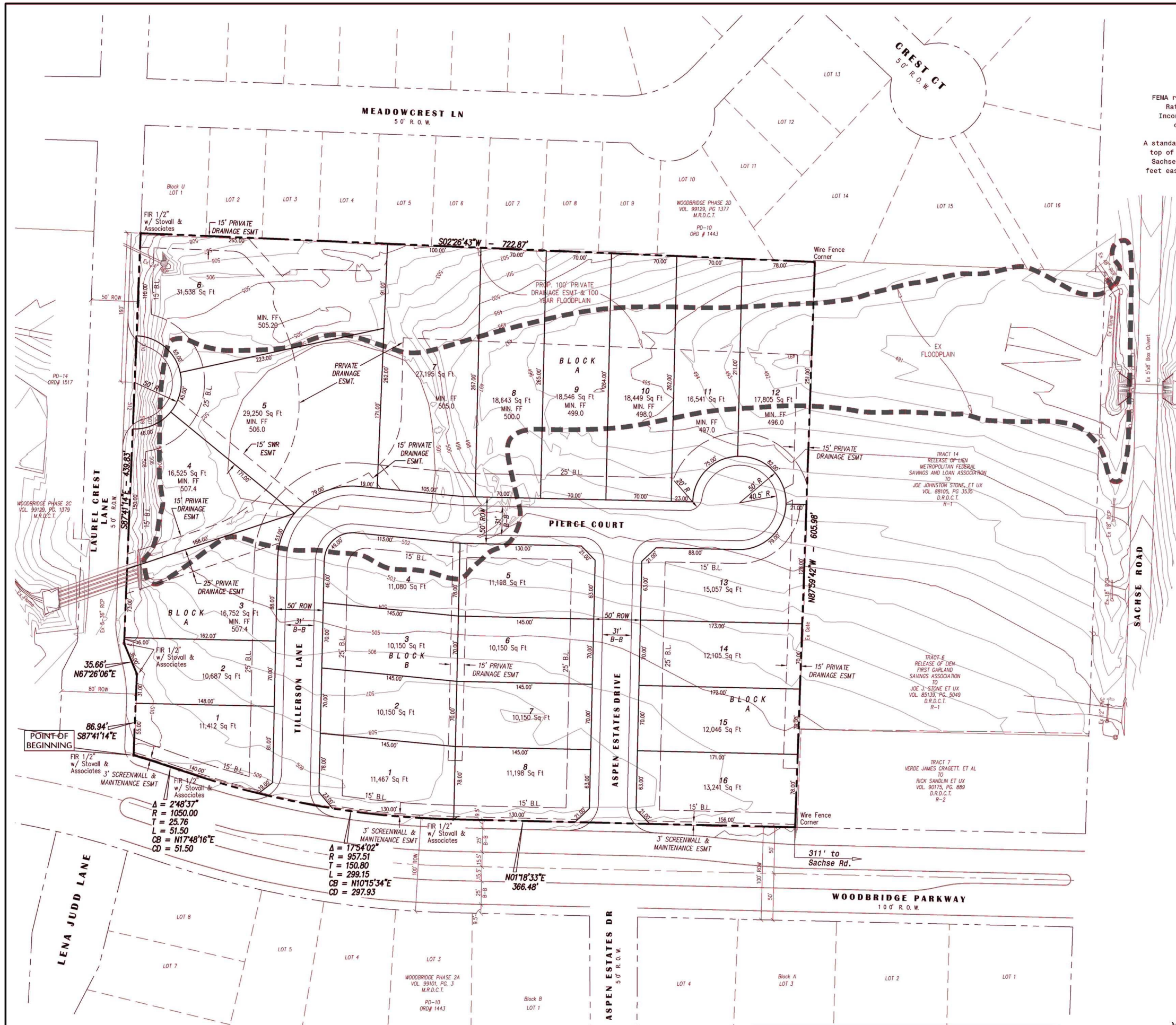

1" = 5 0'

VERTICAL BENCHMARK

FEMA reference mark described on Flood Insurance Rate Map titled "Dallas County, Texas and Incorporated Areas", Map Number 48113C0230 J, dated August 23, 2001 RM65 - 495.76

A standard USC&GS disk stamped W 924 1946 set in the top of a concrete post located 49.2 feet north of Sachse Road, 1050 feet east of Merritt Road, 3.8 feet east of a telephone pole and 2 feet south of a wire fence.

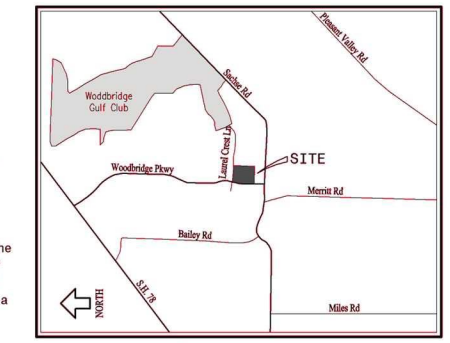

VICINITY MAP

SCALE: 1" = 3000'

STATE OF TEXAS §
COUNTY OF DALLAS §

1. WHEREAS, Janice Stone Tillerson is the owner of a tract of land situated in the Richard Newman Survey, Abstract No. 1072, in the City of Sachse, Dallas County, Texas, being part of the called 47.887 acres tract described in the deed to Joe J. Stone and wife, Patricia Stone recorded in Volume 77081 Page 1320 in the Dallas County Deed Records (DCDR), and being the same as the called 9.9867 acres tract described in the deed to Janis Stone Tillerson, and being more particularly described as follows:

2. BEGINNING at a found ½ inch iron rod with Stovall & Assoc. cap at the intersection of the east right-of-way line of Woodbridge Parkway (110' wide right-of-way) and the south right-of-way line of Laurel Crest Lane (50' wide right-of-way, 80' wide at this point);

3. THENCE Easterly along the south line of Laurel Crest Lane the following:

a. THENCE South 87°41'14" East 86.94 feet to a found ½ inch iron rod with Stovall & Assoc. cap;

b. THENCE North 67°26'06" East 35.66 feet to a found ½ inch iron rod with Stovall & Assoc. cap;

c. THENCE South 87°41'14" East 439.83 feet to a found ½ inch iron rod with Stovall & Assoc. cap;

4. THENCE South 02°26'43" West 722.87 feet generally along a wire fence and along the west side of Block U of Woodbridge Phase 2D addition, an addition to the City of Sachse recorded in Volume 99192 Page 1377 in the Dallas County Plat Records (DCPR) to a wire fence corner ;

5. THENCE North 87°59'42" West 605.98 feet generally along a wire fence to a wire fence corner on said east line of Woodbridge Parkway;

6. THENCE Northerly along the east line of Woodbridge Parkway the following:

a. THENCE North 01°18'33" East 366.48 feet to found ½ inch iron rod with Stovall & Assoc. cap;

b. THENCE Northerly an arc distance of 299.15 feet with a tangent curve to the right said curve having a radius of 957.51 feet, a central angle of 17°54'02" and a chord bearing of North 10°15'34" East 297.93 feet to a found ½ inch iron rod with Stovall & Assoc. cap;

c. THENCE Northerly an arc distance of 51.50 feet with a tangent reverse curve to the left said curve having a radius of 1,050.00 feet, a central angle of 02°48'37" and a chord bearing of North 17°48'16" East 51.50 feet to the Point of Beginning and Containing 434,588 square feet or 9.9768 acres of land more or less.12/11/2012

NOW THEREFORE KNOW ALL MEN BY THESE PRESENTS:

That, I, Janis Stone Tillerson, Owner, do hereby adopt this plat designating the hereinabove described property as _____, an addition to the City of Sachse, and do hereby dedicate to the public use forever the streets and alleys shown thereon, and do hereby reserve the easement strips shown on this plat for the mutual use and accommodation of garbage collection agencies and all public utilities desiring to use or using same. Any public utility shall have the right to remove and keep removed all or part of any buildings, fences, trees, shrubs, or other improvements or growths in which any way endanger or interfere with the construction, maintenance or efficiency of its respective systems on any of these easement strips and any public utility shall at all times have the right of ingress and egress to and from and upon the said easement strips for the purpose of constructing, reconstructing, inspecting, patrolling, without the necessity at any time of procuring the permission of anyone. This plat approved subject to all platting ordinances, rules, regulations and resolutions of the City of Sachse, Texas.

WITNESS OUR HANDS AT SACHSE, TEXAS, this _____day of _____

_____
Janis Stone Tillerson, Owner

STATE OF TEXAS §
COUNTY OF DALLAS §
BEFORE me, the undersigned authority, a Notary Public in and for said County and State, on this day personally appeared Janis Stone Tillerson, Owner, known to me to be the persons whose name is subscribed to the foregoing instrument and acknowledged to me that they each executed the same for the purpose and considerations therein expressed.

GIVEN UNDER MY HAND AND SEAL OF OFFICE this _____ day of _____, 2013.

_____
Notary Public for the State of Texas

SURVEYOR'S CERTIFICATE

KNOW ALL MEN BY THESE PRESENTS:
THAT, I, Thomas C. Holland do hereby certify that I have prepared this plat from an actual and accurate survey of the land and that the corner monuments shown thereon were properly found or placed under my personal supervision in accordance with the Platting Rules and Regulations of the City Planning and Zoning Commission of the City of Sachse.

_____
Thomas C. Holland
Registered Professional Land Surveyor

STATE OF TEXAS §
COUNTY OF DALLAS §

BEFORE, Me, the undersigned authority, a Notary Public in and for said County and State, on this day personally appeared Thomas C. Holland, known to me to be the person whose name is subscribed to the foregoing instrument and acknowledged to me that he executed the same for the purpose and consideration therein expressed and under oath stated that the statements in the foregoing certificate are true.

GIVEN UNDER MY HAND AND SEAL OF OFFICE this _____ day of _____, 2013.

_____
Notary Public for the State of Texas

APPROVAL OF CITY COUNCIL, CITY OF SACHSE
This Preliminary Plat The Enclave, has been submitted to and considered by the City Council of the City of

Sachse, Texas, and is hereby approved by such Council, dated this _____ day of _____, 2013.

(Preliminary Plat – For inspection purposes only and in no way official or approved for record purposes.)

Approved for preparation of Final Plat

Approved By: _____ Date:_____
Mayor, City of Sachse

Attest By: _____ Date:_____
City Secretary

THE ENCLAVE
PRELIMINARY PLAT

FOR INSPECTION PURPOSES ONLY
9.9768 ACRES/434,588 SQ FT
24 Single - Family LOTS
SOUTHEAST CORNER OF
WOODBRIDGE PARKWAY & LAUREL CREST LANE
THE RICHARD NEWMAN SURVEY NO. 1072
CITY OF SACHSE, DALLAS COUNTY, TEXAS

NOTE:
1. "SELLING A PORTION OF THIS ADDITION BY METES AND BOUNDS IS A VIOLATION OF CITY SUBDIVISION ORDINANCE AND STATE PLATTING STATUTES AND IS SUBJECT TO FINES AND WITHHOLDING OF UTILITIES AND BUILDING CERTIFICATES".
2. HOMEOWNER'S ASSOCIATION (HOA) SHALL MAINTAIN ALL OPEN SPACE AREAS AND WALL MAINTENANCE EASEMENT.

OWNER
Ms. Janis Tillerson
529 Highland Oaks
Greenville, Texas 75402
(214) 738-8241

APPLICANT/DEVELOPER
Mr. William Cravens
Metropolitan Interests Corporation
3838 Oak Lawn #1416
Dallas, Texas 75219
(214) 521-0042

Engineer/Surveyor
Binkley & Barfield | C&P
consulting engineers
Mr. Thomas Jones
1801 Gateway Blvd, Suite 101
Richardson, Texas 75080
(972) 644-2800 Fax (972) 644-2817
Firm Registration #3185

Scale 1"=50' Project No. BC12025 January 03, 2013 Sheet 1 of 4

X:\BC12025 (MIC - Sachse)\09 Layout Options\Option 1_021313\BC12025-PPLAT.dwg, 2/13/2013 4:12:06 PM, Universal Document Converter.pc3

Sachse City Hall
3815 Sachse Road Building
B
Sachse, Texas 75048

Legislation Details (With Text)

File #:	13-1383	**Version:**	1	**Name:**	Library Equipment Use
Type:	Agenda Item			**Status:**	Agenda Ready
File created:	2/19/2013			**In control:**	City Council
On agenda:	3/4/2013			**Final action:**	
Title:	Discuss library equipment use for public groups using the library's meeting room. Executive Summary Staff is seeking direction from the Council on library equipment use. There is currently a facility use policy that does not address library equipment usage for public groups using the library's meeting room.				
Sponsors:					
Indexes:					
Code sections:					
Attachments:	Equipment Use March 4, 2013 PDF FacilityUsePDF				

Date	Ver.	Action By	Action	Result

Title
Discuss library equipment use for public groups using the library's meeting room.

Executive Summary
Staff is seeking direction from the Council on library equipment use. There is currently a facility use policy that does not address library equipment usage for public groups using the library's meeting room.

Background
The library has an AV projector and screen that are often used for library programs and by other city departments. A television and DVD player are also available, but they are rarely requested by outside organizations or city departments. There have been minimal requests (no more than two a month) for audio visual projector and screen from groups that use the room. When the equipment is requested, the staff provides setup for them. The current facility use policy (attached) does not address library equipment use.

Policy Considerations
None

Budgetary Considerations
None

Staff Recommendations

powered by Legistar™

Staff will take feedback from Council.

SACHSE PUBLIC LIBRARY

Library Equipment Use

March 4, 2013

City of Sachse Library

HISTORY

- LIBRARY MEETING ROOM RENTAL IS ADDRESSED UNDER THE CURRENT FACILITY USE POLICY
- CURRENT POLICY DOES NOT ADDRESS EQUIPMENT USE
- MINIMAL REQUESTS FOR EQUIPMENT IN THE PASTS
- LIBRARY EQUIPMENT INCLUDES AV PROJECTOR, SCREEN, DVD PLAYER AND TELEVISION

EQUIPMENT USAGE

- LIBRARY PROGRAMS
- CITY PROGRAMS
- MINIMAL REQUESTS FROM GROUPS USING THE MEETING ROOM. IN THE PAST WE HAVE SETUP FOR THEM.

POTENTIAL ISSUES WITH LOANING EQUIPMENT

- DAMAGE TO EQUIPMENT WHICH WOULD BE A SIGNIFICANT LOSS TO LIBRARY SERVICES
- REPLACEMENT COST IF THE EQUIPMENT WAS LOST OR STOLEN
- LOANING THE EQUIPMENT AFTER HOURS
  - POTENTIAL THEFT
  - DAMAGE

REPLACEMENT COSTS

- AV PROJECTOR $400
- SCREENS $150
- TELEVISIONS COSTS $400
- DVD PLAYER $ 50
- TOTAL REPLACEMENT COSTS $1000

WHAT DO OTHER LIBRARIES DO?

- AREAS LIBRARIES THAT ARE SMALL TO MEDIUM DO NOT LOAN EQUIPMENT

- LARGER LIBRARIES LIKE GARLAND, PLANO, AND WYLIE HAVE EQUIPMENT MOUNTED TO THE CEILING IN THEIR MEETING ROOMS.

EQUIPMENT USE SURVEY

CITY	EQUIPMENT USE ALLOWED	POLICY	NOTES
Krum	AV projector	no	setup as needed for patrons
North Richland Hills	dvd, screen	No	charges $100 deposit
Plano	microphone, screen, and podium	no	do not allow use of AV projector or computers
Tyler	no	no	
Burleson	no	yes	
Mansfield	no	no	
Hurst	no	no	ceiling mounted/recessed in ceiling
Highland Park	no	No	
Rowlett	no	mtg rm policy	
Van Zandt	yes	mtg rm policy	noted in meeting room policy
Rockwall	yes	mtg rm policy	training required to use equipment
Greenville	yes	no	staff setup and take down

ALTERNATIVIES

- NO ACTION AND DISCONTINUE LOANING
- DEPOSIT FEE
  - North Richland Hills is the only library that responded to the survey that charges a deposit. ($100)

CONSIDERATIONS

- BUDGETING REPLACEMENT COSTS
- STAFF INVOLVEMENT AFTER HOURS
- THEFT
- DAMAGED EQUIPMENT

RENTAL POLICIES/FACILITY USE REGULATIONS

General

Reservations must be made by telephone or in person with the Parks and Recreation Department for use of the Old City Hall and Senior Activity Center meeting room or the Library for use of the Sachse Library meeting room. Reservations can only be made by City of Sachse residents and must be over 18 years of age. Proof of residency is required. City staff has the final approval in granting facility use for activities and reserves the right, after review to refuse future use to any group, organization or individual exhibiting a lack of regard for the policies stated within this agreement. All activities must be completed by 10:00 p.m. Any exception to this must be designated on the "Facility Use Rental Agreement" and must be approved by staff.

Deposits

A deposit will be collected within one business day of the time the reservation is made. Deposits will be refunded if:

a. Rooms are vacuumed and tables/counters are wiped down.
b. Trash is taken to dumpster.
c. Tables and chairs are put up and placed in their original place.
d. The reservation ends on time. All activities must be completed by 10:00 p.m.

Cancellation

In order to receive a full refund for a facility rental, notice must be given no less than 2 business days prior to the date of the rental. This shall include a full deposit refund. Refunds may be given under special circumstances when 2 days notice is not given at the discretion of City staff.

Decoration

Confetti or glitter is not permitted. Nothing may be hung or taped on the walls.

Kitchen Use

Use of the kitchen is limited to use of the sink only. You must bring your own utensils, napkins, and cups, etc. The use of the facility kitchen supplies is prohibited. The use of the oven and microwave is prohibited without prior approval from City staff.

Setup/Cleanup

Reservation times must include set-up and clean up time. Each reservation group is required to set up the tables and/or chairs and return them to their original location before departure. Each reservation group is responsible for bringing in their own cleaning supplies and trash bags. The group will be allowed to dispose of trash in the dumpster (located in the facility parking lot). A vacuum will be provided for cleanup after reservation. Each reservation group must vacuum and wipe clean all tables, countertops and ovens. All food brought in must be kept on the hard surface and will not be allowed on the carpeted area with the exception of the Old City Hall meeting room.

Music/Noise Level

Activities generating a level of noise that interferes with other areas in use will not be permitted. Music and amplified sound should not be heard in other rooms that are in use within the building.

Alcohol/Tobacco Use

The City of Sachse does not permit alcohol on the premises or property or permit smoking inside the premises or property.

Children/Youth

Adult supervision must be maintained and activities involving minors require a ratio of 1 adult to every 10 children.

Liability

The user is liable for damages occurring during his/her use of the room. The City of Sachse accepts no liability or responsibility for any damage to persons or property arising from the use of the meeting room. Renter is required to be at event at all times.

Rooms Available for Reservation

Rooms available for reservations are as follows (see attached fee schedule for each facility):

a. Library Meeting Room – this room is available at no cost for regular business meetings, special meetings and programs of Sachse non-profit organizations. Other groups may hold meetings a maximum of 4 times per calendar year based on fees listed below. All reservations in this facility can be held for a maximum of 4 hours per use.
b. Old City Hall Meeting Room- this room is available at no cost for regular business meetings, special meetings and programs of Sachse non-profit organizations. Other groups may hold meetings a maximum of 4 times per calendar year based fees listed below. All reservations in this facility can be held for a maximum of 4 hours per use.
c. Senior Activity Center Multi-Purpose Room – this room is available for regular business meetings, special meetings and programs of Sachse non-profit organizations, as well as birthday parties, receptions, etc. Weekday reservations require a 2 hour minimum rental (Monday-Thursday) and weekend reservations require a 4 hour minimum rental (Friday-Sunday).

Facility	Deposit	Room Rental Fees
Library Meeting Room	$25/without food served or $50/with food served	Non-profits - No Rental Fee; Other groups - $25/rental
Old City Hall Meeting Room	$25/without food served or $50/with food served	Non-profits - No Rental Fee; Other groups - $25/rental
Senior Activity Center Multi-purpose Room	$100	$25/hour

Sachse City Hall
3815 Sachse Road Building
B
Sachse, Texas 75048

Legislation Details (With Text)

File #:	13-1400	**Version:**	1	**Name:**	Discussion - City Standard Details
Type:	Agenda Item			**Status:**	Agenda Ready
File created:	2/28/2013			**In control:**	City Council
On agenda:				**Final action:**	
Title:	Discuss City of Sachse Standard Construction Details.				
Sponsors:					
Indexes:					
Code sections:					
Attachments:	Powerpoint Presentation.pdf.pdf Existing Section 1 - General Notes.pdf Existing Section 2 - Paving Details.pdf Existing Section 3 - Storm Sewer Details.pdf Existing Section 4 - Sanitary Sewer Details.pdf.pdf Existing Section 5 - Water Details.pdf Existing Section 6 - Miscellaneous Details.pdf				

Date	Ver.	Action By	Action	Result

Title
Discuss City of Sachse Standard Construction Details.

Executive Summary
Discussion of proposed revisions to the City of Sachse Standard Construction Details

Background
The City of Sachse's Standard Construction Details were last updated in November of 2008. Periodic review of construction details is necessary to ensure that the most up-to-date construction materials and technologies are utilized for both public and private improvements. In addition, periodic review of the general notes and details relating to Water and Sanitary Sewer Construction is necessary to ensure that the City of Sachse is in compliance with the latest TCEQ and EPA requirements.

Staff will recieve comments and recommendations from Council, and prepare a final set of Standard Construction Details for Council approval at a future Sachse City Council Meeting.

Policy Considerations
N/A

Budgetary Considerations
N/A

powered by Legistar™

Staff Recommendations
None.

STANDARD CONSTRUCTION DETAILS

CITY COUNCIL

MARCH 4, 2013

BACKGROUND

The City of Sachse Standard Construction Details were last updated in November 2008.

Periodic review of construction details is necessary to ensure that the most up-to-date construction materials and technologies are utilized for both public and private improvements.

Periodic review of the general notes and details relating to Water and Sanitary Sewer Construction is necessary to ensure that the City of Sachse is in compliance with the latest TCEQ and EPA requirements.

A complete list of the recommended changes has been attached to the Agenda and provided for review.

CITY COUNCIL

MARCH 4, 2013

GENERAL NOTES

Recommended Changes to the General Notes

ARTICLE I

G. Change language to reflect 10% for one year
H. Add language regarding the 4.5% Inspection Fee to be paid prior to release of the permit.

ARTICLE II

A. Change "six inches" to "eight inches" (Min. Water Main Size)

General Notes for Water System Improvements

3b. Change "type 'K' soft copper pipe" to "SDR-9 Class 200"
6. Change "Copies" to "One Hard Copy and a CD or DVD with both PDF and CAD files"

CITY COUNCIL

MARCH 4, 2013

GENERAL NOTES (Cont.)

Recommended Changes to the General Notes

ARTICLE III

B. Change "six inch" to "eight inch" (Min. Sanitary Main Size)
C. Specify SDR 35 pipe for depths up to 10'
Specify SDR 26 pipe for depths greater than 10'

General Notes For Sanitary Sewer System Improvements

1. Specify SDR 35 pipe for depths up to 10'
Specify SDR 26 pipe for depths greater than 10'

General Notes For Utility Crossings

1. Remove space between "of" and "jacking"
2. Remove space between "of" and "the"

CITY COUNCIL

MARCH 4, 2013

GENERAL NOTES (Cont.)

Recommended Changes to the General Notes

ARTICLE IV

1b. Change minimum thickness from 6 inches to 8 inches
Remove space between "be" and "reduced"

1c. Change to "a minimum of 3,500 p.s.i."

1e. Change "0.50%" to "0.7% unless approved by the City Engineer"

General Notes for Paving Improvements

7. Add "10%" to the maintenance bond description

CITY COUNCIL

MARCH 4, 2013

PAVING

Recommended Changes to the Standard Details

SPECIAL NOTES

- Change pavement thicknesses for road sections:
  - 31' Road – 8" pavement
  - 37' Road – 8" pavement
  - 45' Road – 8" pavement
  - 2-25' Road – 10" pavement

SECTION 2A – Page 3

- Change reinforcement to #4 bars @ 18" on center
- Add reinforcement table for thoroughfares (additional/larger reinforcement for thoroughfares with truck traffic)
- Add a Right Turn Section

CITY COUNCIL

MARCH 4, 2013

PAVING

Recommended Changes to the Standard Details

SECTION 2A – Page 4
- Change 1-1/2" PVC Conduit to 2" PVC Conduit
- Add Note: Stamped concrete required for all medians 4' and less in width

SECTION 2B – Page 3
- Update reinforcement for all details to #4 bars @ 18" O.C.
- Update pavement thicknesses to match Special Note section

SECTION 2B – Page 4
- Add a note for stamped concrete for all medians 4' and less in width

CITY COUNCIL

MARCH 4, 2013

PAVING

Recommended Changes to the Standard Details

SECTION 2C – Page 2
- Add a note for all subgrade beneath sidewalk to be compacted to 95% Standard Proctor Density
- Add a note for all sidewalks to be constructed in accordance with Texas Accessibility Standards (TAS)

SECTION 2C – Page 3-7
- Revise details and notes of all Barrier Free Ramps to match TxDOT standard details (to be in compliance with TAS)

CITY COUNCIL

MARCH 4, 2013

PAVING

Recommended Changes to the Standard Details

SECTION 2D – Page 2-5
- Change reinforcement to #4 bars @ 18" on center

SECTION 2D – Page 5
- Reference Storm Sewer detail for drainage crossing

SECTION 2D – Page 10
- Remove unnecessary leader on right side of detail

SECTION 2D – Page 11
- Change doweling from #3 bars to #4 bars

CITY COUNCIL

MARCH 4, 2013

PAVING

Recommended Changes to the Standard Details

SECTION 2E – Page 2
- Change asphalt pavement section to match TxDOT standards

CITY COUNCIL

MARCH 4, 2013

STORM SEWER

Recommended Changes to the Standard Details

SECTION 3
Add a section for pipe materials and sizes
Add a section for culverts
Add a section for wye inlets
Add a section for junction boxes

CITY COUNCIL
MARCH 4, 2013

STORM SEWER

Recommended Changes to the Standard Details

SECTION 3A – Page 2-3

- Add manhole depth chart:

Manhole Depth	Manhole Diameter
0-12'	4'
12'-20'	5'
20'+	City Engineer Approval Required

SECTION 3A – Page 4-5

- Move to new SECTION 3E - Embedment

CITY COUNCIL
MARCH 4, 2013

STORM SEWER

Recommended Changes to the Standard Details

SECTION 3B – Page 6
Change manhole cover from ductile iron PAMREX to standard cast iron.

SECTION 3D – Page 2
- Under TYPE I, add a note for channel to be planted with plant material type approved by the City Engineer.
- Under TYPE II, change maximum slope to 4:1, and recommended slope to 5:1.

SECTION 3D – Page 5
Add note: City Engineer approval required for all sidewalk flumes.

CITY COUNCIL

MARCH 4, 2013

SANITARY SEWER

Recommended Changes to the Standard Details

SECTION 4A – Page 2
- Change note 1 to SDR35 for depth 0-10', SDR26 for depth 10-20', and special approval required for depths exceeding 20'
- Change Note 11 to 15' instead of 16'
- Change PAMREX ductile iron manhole cover to standard cast iron manhole cover
- Add Note 15: All manholes to be concrete. No fiberglass or alternate materials allowed for manhole construction.

SECTION 4B – Page 2
Add additional embedment types for special situations (utility crossings, creek crossings, deep mains, shallow mains)

CITY COUNCIL

MARCH 4, 2013

WATER

Recommended Changes to the Standard Details

SECTION 5C – Page 5

- Add note: No hand-mix concrete allowed for thrust blocking, including sack-crete.

SECTION 5C – Page 8-9

- Add a note to consult with City Engineer and City of Sachse Fire Department for approved location of detector check.

SECTION 5C

- Add a detail for water plug installation, showing additional collar/bolt requirements.

CITY COUNCIL

MARCH 4, 2013

WATER

Recommended Changes to the Standard Details

SECTION 5C – Page 5

- Add details for the following situations where encasement is required:
  - Shallow water main
  - Water/sanitary sewer crossing
  - Water/storm sewer crossing (including box culverts)
  - Railroad crossing

CITY COUNCIL

MARCH 4, 2013

MISCELLANEOUS

Recommended Changes to the Standard Details

SECTION 6A – Page 2

- Add a note for contractor to provide a final survey to the City of Sachse showing wall location relative to wall easement and public Right-of-way prior to City acceptance.
- Add note for alternate screen wall designs to meet or exceed City of Sachse standards. All alternate designs require special review and approval by the City of Sachse.
- Add a note for all piers to be inspected by the City of Sachse for proper depth and construction prior to construction wall.
- Add detail information for brick leave-outs to allow drainage.
- Add detail of ¼" thick steel U-channel required for all walls with suspended panels between columns.

CITY COUNCIL

MARCH 4, 2013

MISCELLANEOUS

Recommended Changes to the Standard Details

SECTION 6A – Page 6

- Revise detail to show two options
  - brick leave-outs to allow drainage.
  - ¼" thick steel U-channel for all walls with suspended panels between columns.

CITY COUNCIL

MARCH 4, 2013

MISCELLANEOUS

Recommended Changes to the Standard Details

SECTION 6C

- Move headwall details into the Storm Sewer section

CITY COUNCIL

MARCH 4, 2013

DISCUSSION

CITY COUNCIL

MARCH 4, 2013

SECTION 1
GENERAL NOTES

CITY OF SACHSE, TEXAS DEPARTMENT OF ENGINEERING		
STANDARD CONSTRUCTION DETAILS		
GENERAL NOTES		
APPROVED:		
DATE: NOVEMBER 2008	REVISED:	Page 1

CITY OF SACHSE, TEXAS

Standards for the construction of Drainage Facilities, Water Facilities, Sewer Facilities, and Pavement of Public Streets, Highways, Alleys, Thoroughfares and other Public Facilities. Refer to North Central Texas Council of Governments (NCTCOG) standard specifications and drawings for further information on any public works standard details not covered by these guidelines.

ARTICLE I
GENERAL

A. All proposed facilities to be constructed shall meet the requirements of the City Zoning Ordinance and Subdivision Regulations.

B. All Construction plans and specifications for drainage, water, sewer, street, alley or other public improvements shal be submitted for review and consideration of approval by the City prior to the start of any construction.

C. Improvements for drainage, pavement, water and sewer facilities shall conform to the requirements of these standard construction details and related specifications.

D. The developer, Builder or Owner shall be responsible for staking and for all Engineering, Planning and the Surveying required for the development of plans, specifications and construction supervision and shall certify the facilities have been constructed in accordance with the specifications.

E. As-built plans and construction maintenance bond shal be provided to the City as required by the various regulations and ordinances prior to acceptance of the improvements by the City.

F. The City has adopted the standard and specifications for Public Works Construction developed by the North Central Texas Council of Government.

G. The Contractor shall furnish a maintenance bond to the City to run one year from the date of acceptance of the system by the City.

ARTICLE II
DESIGN FOR WATER SYSTEM IMPROVEMENTS

Public Water System - All extensions and/or improvements to the public water system shall comply with the following requirements:

A. All water distribution and transmission mains shall not be less than six inches diameter and looped. Additional sized lines may be required to serve the improvements within the system depending upon the demands and supply capability.

B. Standard three-way fire hydrants with six inch connection to mains shall be provided every 300 feet along the line in commercial and industrial areas and six hundred feet along the line in residential areas. Every building shall be within five hundred feet of a standard fire hydrant. Hydrants shal have one - 4 ½ inch and two 2 ½ inch openings with National Standard hose threads.

C. Control valves with boxes shall be located such that a maximum spacing of 500 feet exists in commercial and industrial areas and 800 feet in residential areas.

D. Air relief valves may be constructed and required at all high points in water lines and dead end lines.

E. When dead end lines are necessary and approved by the City, the line shall have adequate concrete blocking to withstand expected pressures.

F. Water lines shall not be located closer than nine (9') feet to existing or proposed sewer lines. Water and sewer lines which are closer than nine feet shall be encased in concrete or constructed of pressure pipe.

G. When aerial creek crossing are required, supporting piers and encasements shall be provided.

GENERAL NOTES FOR WATER SYSTEM IMPROVEMENTS

All work and materials shall be in accordance with City Standard Specifications and General Design Standards.

1. Water Mains - All water mains shall have a minimum of 42" cover over the top of the pipe.

2. All water mains shall be hydraulically tested to not less than 150 p.s.i. pressure for at least a four hour period. Leakage rate shall not exceed 11.65 gallons per inch of nominal diameter of pipe per mile over a 24 hour period. The contractor shall flush and sterilize lines and prove lines to be free of chloroform organisms by obtaining samples for laboratory tests for contamination. The contractor shall reflush and resterilize until samples for test area are free from contamination. All ditches not under existing or proposed paving sections shall be water jetted. Where ditches cross proposed street or alley sections, the ditch shall be tamped and compacted to 95% Proctor Density.

3. All residential water service shall be as follows:
   a. A water meter box with lock lid to be installed one (1) foot back of curb line.
   b. The water service shall be type "K" soft copper pipe, unless otherwise shown on the plans.
   c. Contractor shall tie a 1" wide piece of blue plastic flagging to the water service meter line and shall leave a minimum of 36" flagging exposed after backfill, curb and paving is complete.
   d. The utility contractor shall install the water services to a point two (2') feet from curb line at a depth of 12 inches. The meter box shall be furnished and installed by the contractor after the paving contractor has completed the fine grading in back of the curb. Each service location will be marked on the curb with a blue letter "W" by the Utility Contractor and field measurement tied to building corners or both property lines as shown on the "As-Built" drawings.

4. All bolts and nuts used with mechanical joint fittings shal be "Cor-Ten" steel or Cadmium Plated steel with retainer gland.

5. Valve boxes shall be furnished and set on each gate valve. After the final clean-up and alignment has been completed, the contractor (utility) shall pour a concrete block 24" x 24" x 6" around all valve box tops so the finished grade is level with the finished parkway.

6. The contractor shall be responsible for providing "As-Built" plans to the engineer showing the location of water services and valves by measured distance to both lot lines. This information shall be placed and marked "As-Built" by the design engineers. Copies of these "As-Built" plans shal be furnished to the City as required.

7. The installation of a blue Stemsonite (or equal) Model 88-SSA fire hydrant will be made by the contractor.

8. Fire hydrants shall be painted as follows:
   a. Metallite Pure Aluminum #992 for 6 inch mains.
   b. Alkyd Industrial Enamel, Imperial Blue #4564 for 8 inch mains.
   c. Alkyd Industrial Enamel, Safety Yellow #4540 for 10 inch or larger water mains.

9. All hydrants are to be painted with two coats of aluminum paint. When a color code other than aluminum is required, the top bonnet, including the lip and all nozzle caps shall be painted the appropriate color.

10. All water mains shall be a minimum of six (6) inches inside diameter, AWWA C900 Class 150 pressure rating. All PVC water pipe shall be Blue in color and installed with a "Tracer Tape" over the top of the pipe.

ARTICLE III
DESIGN FOR SEWAGE SYSTEM IMPROVEMENTS

Public Sewerage System - All extensions and/or improvements to the public sewerage system shall comply with the following requirements:

A. Sewer lines shall be constructed in accordance with the plans, specifications and standard details.

B. All sewage collection lines shall be a minimum of six (6") inches in diameter and house lateral lines shall have a minimum of four (4") inches in diameter extended to each Living Unit. For multi-family or commercial unit, a minimum size service shall be six (6") inches.

C. Sewer lines shall be P.V.C. SDR 35 min., green in color with a joint suitable of limiting infiltration to no greater than 100 gallons per inch of diameter per day per mile of pipe.

D. Sewer lines shall be designed and constructed with the necessary embedment to withstand expected loads.

E. In all sewer lines a minimum velocity of two feet per second shall be maintained for full flow or half full flow conditions.

F. Aerial support for sewer lines across creeks or other depression areas shall be provided with supporting piers and concrete encasements.

G. Location and sizing of any sewage lift station will be handled on an individual case basis.

H. Where public sewer service is not available and private sewage disposal facilities are necessary, compliance shal be achieved thru the Public Health Department in accordance with the construction standards for onsite sewerage facilities developed and approved by the Texas Department of Health with an effective date June 13, 2001 or as may be amended.

GENERAL NOTES FOR SANITARY SEWER SYSTEM IMPROVEMENTS

All work and materials shall be in accordance with the City Standard Specifications and General Design Standards.

1. All P.V.C. sewer pipe shall be S.D.R. 35, and shall be laid on a minimum of Class "B-1" Embedment.

2. Contractor shall tie a 1" wide piece of red plastic flagging to the end of sewer service and shall leave a minimum of 36" of flagging exposed after backfill, curb and paving is completed. Contractor shall paint a red "S" on the curb or alley opposite location of the sewer service.

3. The Contractor shall furnish a maintenance bond to the City to run one (1) year from the date of final acceptance of the system by the City.

4. The Contractor shall be responsible for providing "As-Built" plans to the Engineer showing the location of sewer service by distance to both lot lines. This information shall be placed on the Engineering Plans and marked "As-Built" by the Design Engineer. Copies of these "As-Built" plans shall be furnished to the City as required. Ties shall be made by distance measurements from both lot lines or from building corners for all manholes, cleanouts and services.

5. All sanitary sewer lines shall be tested for infiltration and exfiltration by the Low Pressure Air Test Method in accordance with the standard specifications and as shown on the plans.

6. All P.V.C. sewer pipe shall be installed with a "Tracer Tape" over the top of the pipe. All P.V.C. sewer pipe shall be green in color.

7. All P.V.C. sewer lines should be tested with a mandrel to insure the conduit system conforms to the Standard Specifications.

8. All sewer manholes shall be tested for infiltration by an approved process.

GENERAL NOTES FOR UTILITY CROSSINGS

1. Tunneling and boring under city streets shall be accomplished by means of jacking, boring or tunneling equipment.

2. The voids outside of the carrier pipe or casing pipe shal be backfilled by hydraulically placed material so that there are no open voids over the roof of the tunnel or bore. This shall be done without damage to the roadway surface.

3. All bore pits, trenches and inspection holes shall be backfilled within 48 hours after the installation of utility lines. The method of compaction shall be such that a soil density equal to that existing prior to the start of construction will be required. Any excess or surplus material resulting due to displacement of utility lines and conduits shall be disposed of in an acceptabb manner to the City.

4. The sections that are shown as typical sections shal apply to any streets, alleys, driveways, roadways etc., that will be within the City right-of-way or easement.

5. The Contractor shall be required to install all necessary warning and safety devices that will protect the safety and health of the public until the work has been finished and accepted by the City.

6. The use of a casing pipe will be based upon the specific project location and soil conditions. The construction plans will show casing pipe to be used on the specific utility crossing.

ARTICLE IV
DESIGN FOR STREETS, ALLEYS AND SIDEWALKS

1. Concrete - all streets and alleys and sidewalks, except streets which conform to specific conditions shall be paved with concrete per the following requirements:
   a. Streets, alleys and sidewalks shall be constructed in accordance with the standard construction details.
   b. Concrete streets shall be constructed over a lime stabilized sub grade with a minimum thickness of 6 inches. The plasticity index must be reduced below fourteen (14) and the sub grade shall extend twelve (12") inches behind the curb.
   c. All streets and alleys shall be constructed of 3,500 p.s.i strength concrete with the specified reinforcement.
   d. All sidewalks and driveways shall be constructed with 3,000 p.s.i. strength concrete with the specified reinforcement.
   e. The minimum grade on streets or alleys shall be 0.50%.

2. Asphalt Streets - Streets may be paved with asphalt and constructed in accordance with a special design detail as specified and allowed by the City Ordinance.

GENERAL NOTES FOR PAVING IMPROVEMENTS

All work and materials shall be in accordance with the City Standard Specifications and General Design Standards.

1. The Street and alley right-of-way width shall be excavated full width in accordance with the street and sidewalk section to be constructed.

2. The sub grade for all street and alley paving shall be stabilized with Hydrated Lime material. The amount of lime material shall be that amount which will reduce the plasticity index (P.I.) below fourteen (14). If no laboratory control is used the contractor shall furnish and place an amount of lime equal to six percent (6%) by unit dry weight of soil estimated at 95 pounds per cubic foot, or 44 pounds of lime per square yard of surface area treated to an eight (8") inch thickness, with laboratory control.

3. All concrete paving for streets and alley construction shall have a minimum of five (5) sacks per cubic yard and devebp a compressive strength of 3,500 pounds per square inch in 28 days. The design must be submitted by a certified lab.

4. All roadway embankments shall be compacted to a density of 95 percent AASHO Standard Proctor at Optimum Moisture Content unless otherwise shown approved by the City.

5. All stabilized lime treated sub grade shall be compacted to a density of 95 percent AASHO Standard Proctor at Optimum Moisture Content.

6. Testing of materials required for the construction of the specified street and alley improvements shall be performed by an approved agency for testing materials. The City Engineer shall approve the laboratory nominated to do the testing of materials. It shall be the Contractors responsibility to show by standard testing procedures that the work constructed does meet the requirements of the specifications.

7. The Contractor shall furnish a maintenance bond to the City to run one (1) year from the date of acceptance of the improvements by the City.

8. All dumpster sites or solid waste container units shall have a paved lane up to the site that shall consist of a minimum of seven (7") inches of 3,500 p.s.i. strength reinforced concrete on a six (6") inch lime stabilized sub grade.

ARTICLE V
DESIGN FOR DRAINAGE FACILITIES

Drainage Facilities shall be designed in accordance with the City Comprehensive Drainage and Storm water control ordinance.

GENERAL NOTES FOR DRAINAGE IMPROVEMENTS

All work and materials shall be in accordance with the City Standard Specifications and General Design Standards.

1. Storm Sewer Pipe Embedment
   a. A compacted crushed stone or pea gravel cushion, four (4") inches thick shall be required under the bottom of the pipe unless otherwise shown on the construction plans.
   b. The initial backfill of select material or fine granular material be required to a minimum of six (6") inches over the top of the pipe unless otherwise shown on the construction plans.
   c. All ditches not under existing or proposed paving sections shall be water jetted. Where ditches cross existing or proposed street or alley sections, the ditch section shall be tamped and compacted to 95% Standard Proctor Density or backfilled with free flowing sand.

2. Concrete Pipe Joints
   The joints shall be constructed and joined together in such a manner that no spill through of backfill will occur. This includes the lift holes used in certain size pipe. The use of the following types of joint materials are acceptable.
   a. Cold applied, plastic asphalt joint compound
   b. Rubber gaskets
   c. Cold applied, preformed plastic gasket

3. Storm Drainage Inlets
   a. The type of drainage inlet shall be as indicated on the construction plans. For secondary and major street sections, a recessed type inlet shall be required. For industrial and residential streets, a curb line inlet will be acceptable unless otherwise shown on the construction plans.
   b. The variable height curb, throat section and leave out of the drainage inlet shall be included in the cost of the drainage inlet.
   c. A round manhole cover with locking device shall be placed on all inlet tops. The top shall be placed near the outlet pipe.
   d. The inlet throat shall be constructed with a rounded section with a maximum depth of opening of seven and one-half (7 ½") inches unless otherwise shown on the construction plans.

SECTION 2
PAVING DETAILS

INDEX

CONTENTS	SECTION
STRAIGHT CROWN STREETS	2-A
PAVEMENT JOINTS	2-B
SIDEWALKS & BARRIER FREE RAMPS	2-C
ALLEY AND DRIVEWAY RETURNS	2-D
ASPHALT PAVEMENT DETAIL	2-E

SECTION 2-A
STRAIGHT CROWN STREETS

CITY OF SACHSE, TEXAS DEPARTMENT OF ENGINEERING		
STANDARD CONSTRUCTION DETAILS PAVING		
STRAIGHT CROWN STREETS		
APPROVED:		
DATE: NOVEMBER 2008	REVISED:	Page 1

GENERAL NOTES

A. GENERAL
PAVEMENT THICKNESS FOR STRAIGHT CROWN STREETS SHALL BE AS SPECIFIED BELOW IN SPECIAL NOTES.

STANDARD SPECIFICATIONS
B. REINFORCED CONCRETE PAVEMENTS
1. ALL CURBS SHALL BE PLACED INTEGRAL WITH PAVEMENT
2. CURBS SHALL MEET THE SAME COMPRESSIVE STRENGTH AS SPECIFIED FOR THE CONCRETE PAVEMENT.
3. DETAIL AND ARRANGEMENT OF JOINTS, ALL TYPES, SHALL BE SHOWN ON SHEET SD-3 OF THE STANDARD CONSTRUCTION DETAILS.
4. BAR LAPS SHALL BE 30 DIAMETERS

C. SUBGRADE
SUBGRADE UNDER ALL PAVEMENT SHALL BE 8 INCHES THICK AND SHALL BE STABILIZED WITH 6% BY WEIGHT OF HYDRATED LIME (44 LBS/SQUARE YARD) AND COMPACTED TO A DENSITY NOT LESS THAN 95% AS DETERMINED BY A.A.S.H.O. T-99. LABORATORY TESTS MAY BE SUBMITTED TO THE ENGINEERING DEPARTMENT FOR APPROVAL TO LOWER AMOUNT OF LIME REQUIRED.

D. BAR CHAIRS OR AN APPROVED SUPPORTING DEVICE SHALL BE FURNISHED.

E. CROSS SLOPE SHALL BE 1/4" PER FOOT UNLESS APPROVED BY ENGINEERING DEPARTMENT.

SPECIAL NOTES

PVM'T WIDTH BACK-BACK	PVM'T THICKNESS	28 DAY COMPRESSIVE STRENGTH	LIME	SUBGRADE THICKNESS
31'	6"	3500 psi	MINIMUM 6% BY UNIT WT. 44 LBS. PER SQUARE YARD	8"
37'	6"	3500 psi		8"
45'	7"	3500 psi		8"
2 - 25'	8"	4000 psi		8"

CITY OF SACHSE, TEXAS
DEPARTMENT OF ENGINEERING

STANDARD CONSTRUCTION DETAILS
PAVING

STRAIGHT CROWN STREETS - NOTES

APPROVED:

DATE: NOVEMBER 2008 | REVISED: | Page 2

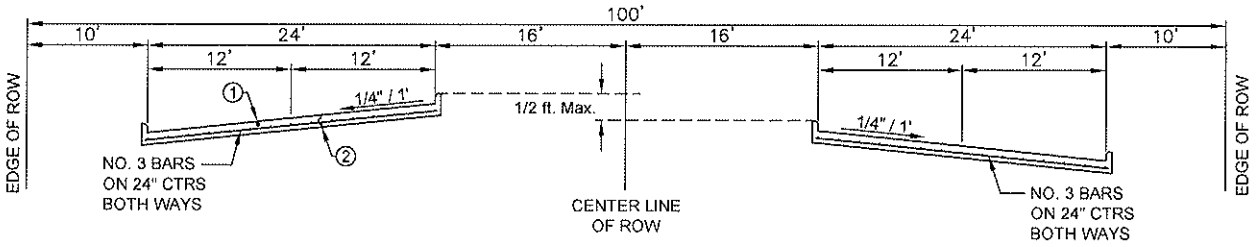

REGULAR SECTION

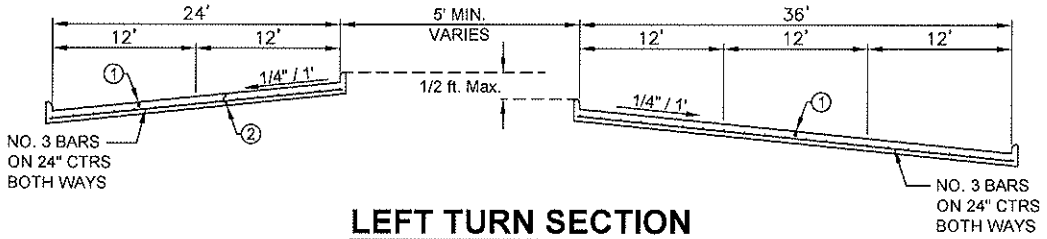

LEFT TURN SECTION

LEGEND

① SAWED LONGITUDINAL DUMMY JOINT

② CONSTRUCTION JOINT (FULL WIDTH PVMT IS ALLOWED WHERE APPROVED BY CITY OF SACHSE) DELETE IF PAVING IS 25 FT. WIDTH TO BE WIDENED LATER. INSTALL CURB IF PAVING IS LESS THAN FULL WIDTH OF 33' - 36'

CITY OF SACHSE, TEXAS DEPARTMENT OF ENGINEERING		
STANDARD CONSTRUCTION DETAILS PAVING		
STRAIGHT CROWN STREETS		
APPROVED:		
DATE: NOVEMBER 2008	REVISED:	Page 3

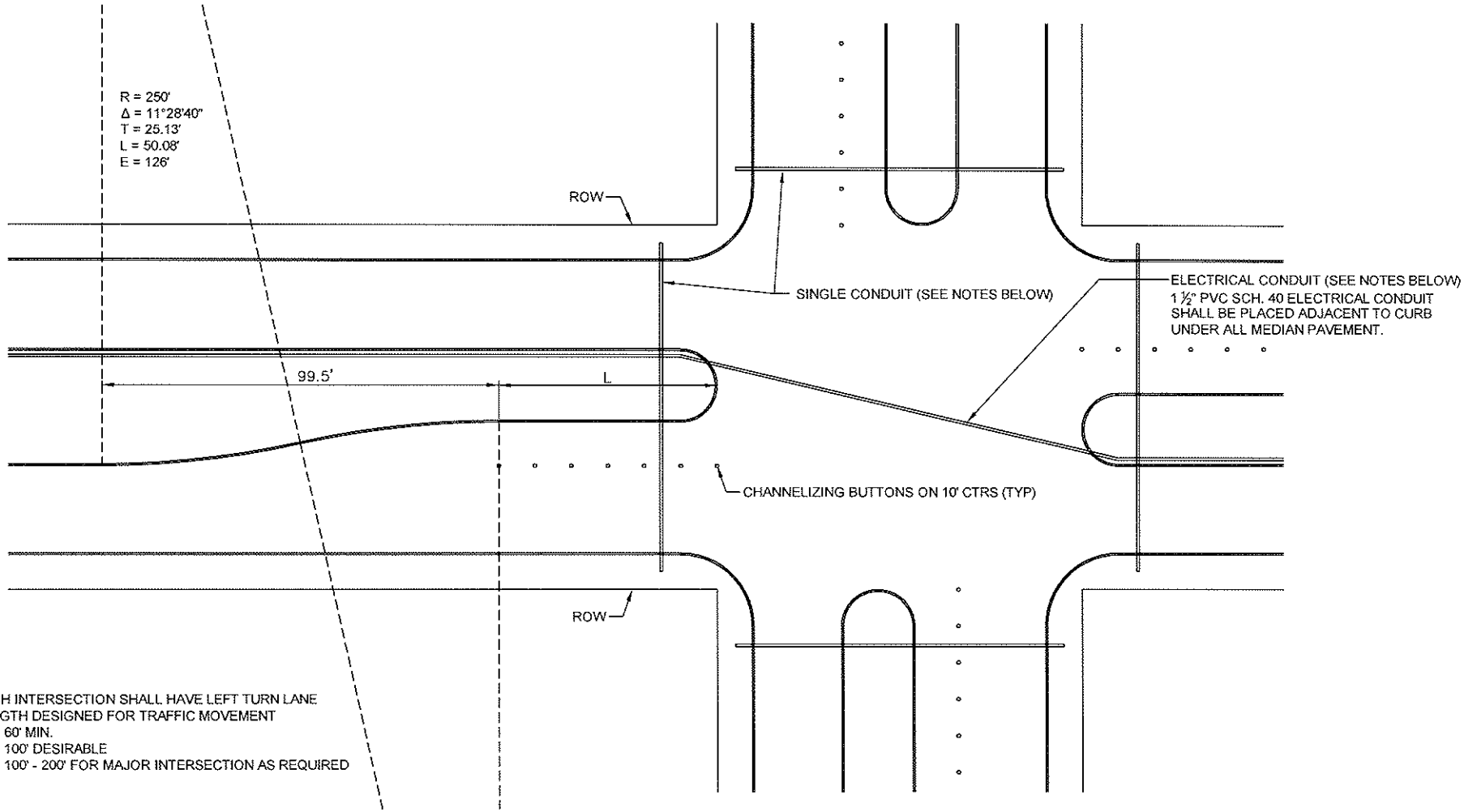

EACH INTERSECTION SHALL HAVE LEFT TURN LANE LENGTH DESIGNED FOR TRAFFIC MOVEMENT
L = 60' MIN.
L1 = 100' DESIRABLE
L2 = 100' - 200' FOR MAJOR INTERSECTION AS REQUIRED

NOTES:

1. 3" PVC SCH 40 TO BE INSTALLED CONTINUOUS CROSS INTERSECTION, EXTENDING TO 2' BEHIND CURB.
2. RED MARKER TAPE IS TO BE INSTALLED ON THE ENDS OF THE CONDUIT.
3. THE EXACT LOCATION WHERE THE CONDUIT CROSSES UNDER THE PAVING ARE TO BE CHISELED WITH AN "X" AND PAINTED WITH RED PAINT ON THE CURB OR PAVING.
4. A NYLON CORD SHALL BE PLACED IN ALL CONDUIT UNDER PAVEMENT. THIS CORD SHALL EXTEND A MINIMUM OF 1' FROM THE END OF THE CONDUIT

PLAN

BLVD. PAVING SECTION

CITY OF SACHSE, TEXAS DEPARTMENT OF ENGINEERING		
STANDARD CONSTRUCTION DETAILS PAVING		
STRAIGHT CROWN STREETS		
APPROVED:		
DATE: NOVEMBER 2008	REVISED:	Page 4

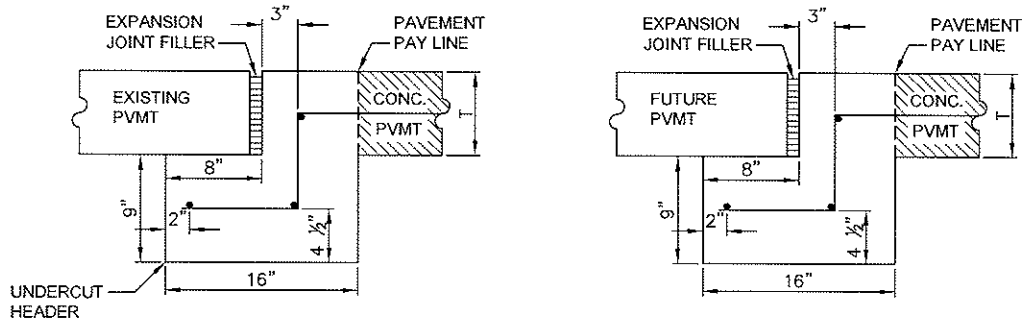

PAVEMENT BARS TO BE BENT DOWN INTO HEADER
HEADER AND PAVEMENT TO BE MONOLITHIC

STREET HEADER

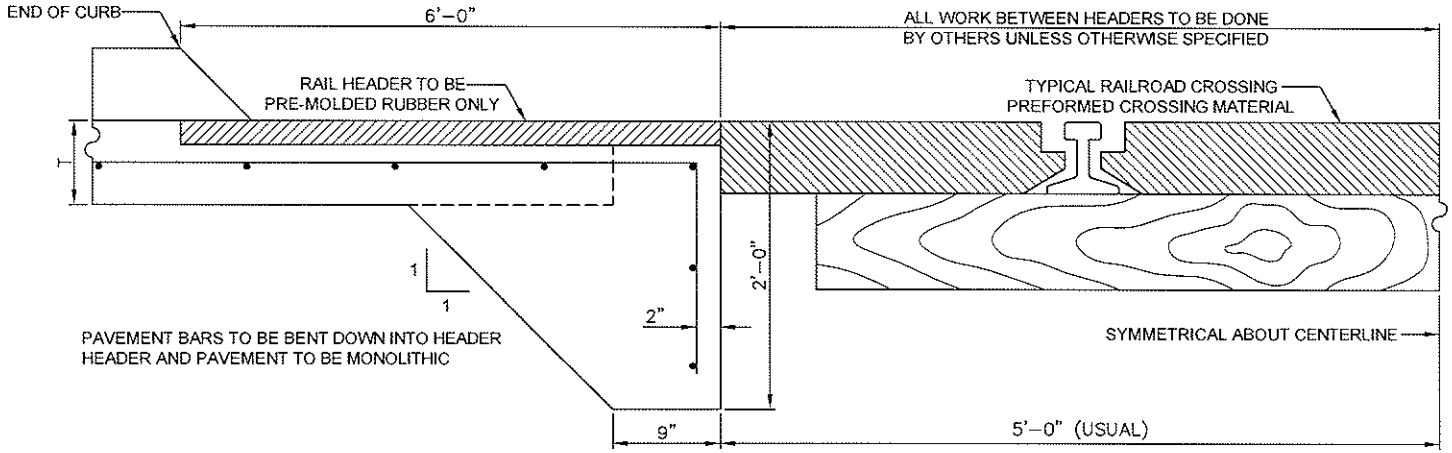

RAIL HEADER

CITY OF SACHSE, TEXAS DEPARTMENT OF ENGINEERING		
STANDARD CONSTRUCTION DETAILS PAVING		
STRAIGHT CROWN STREETS		
APPROVED:		
DATE: NOVEMBER 2008	REVISED:	Page 5

SECTION 2-B
PAVEMENT JOINTS

CITY OF SACHSE, TEXAS DEPARTMENT OF ENGINEERING		
STANDARD CONSTRUCTION DETAILS PAVING		
PAVEMENT JOINTS		
APPROVED:		
DATE: NOVEMBER 2008	REVISED:	Page 1

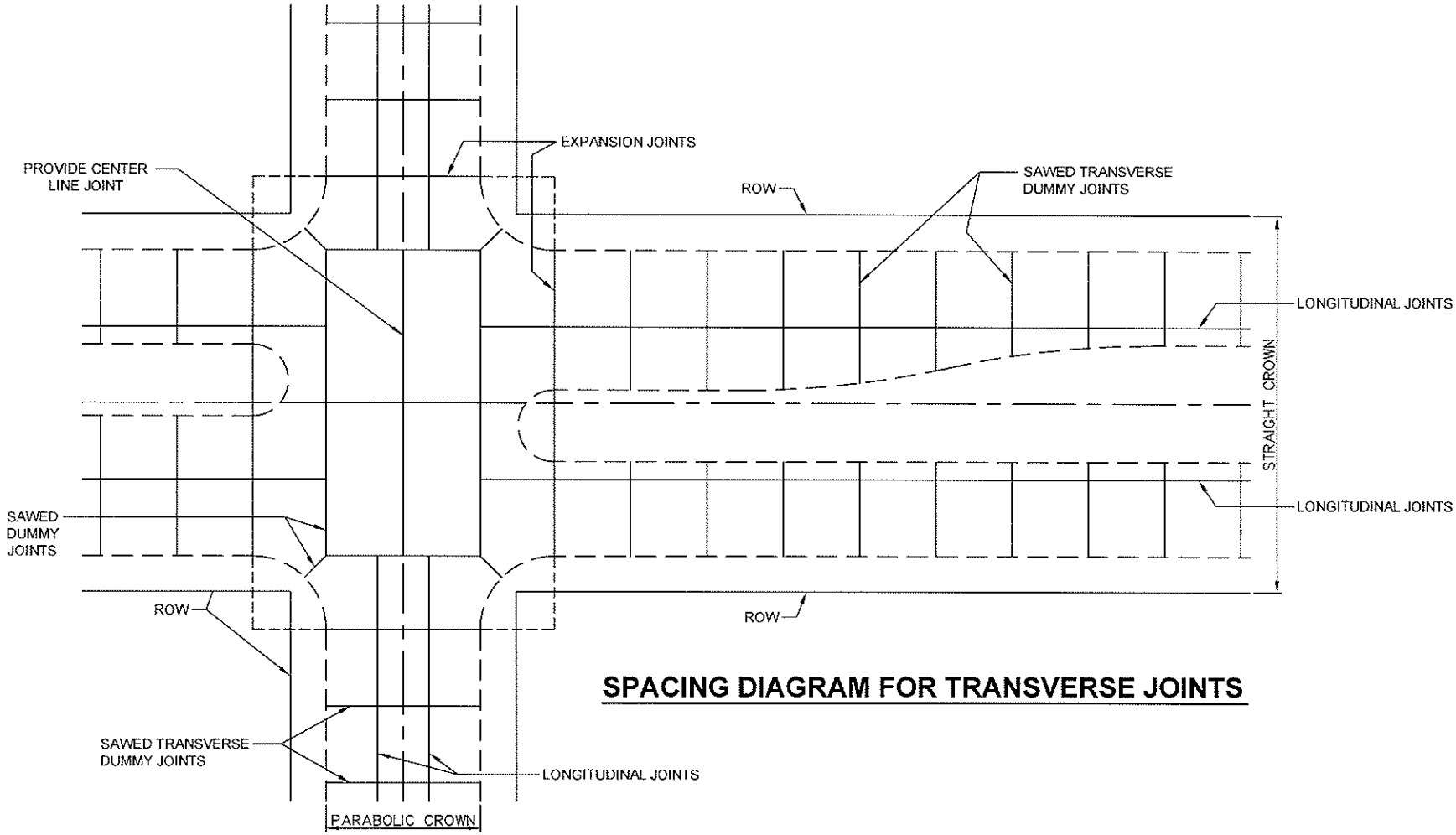

SPACING DIAGRAM FOR TRANSVERSE JOINTS

CITY OF SACHSE, TEXAS DEPARTMENT OF ENGINEERING		
STANDARD CONSTRUCTION DETAILS PAVING		
PAVEMENT JOINTS		
APPROVED:		
DATE: NOVEMBER 2008	REVISED:	Page 2

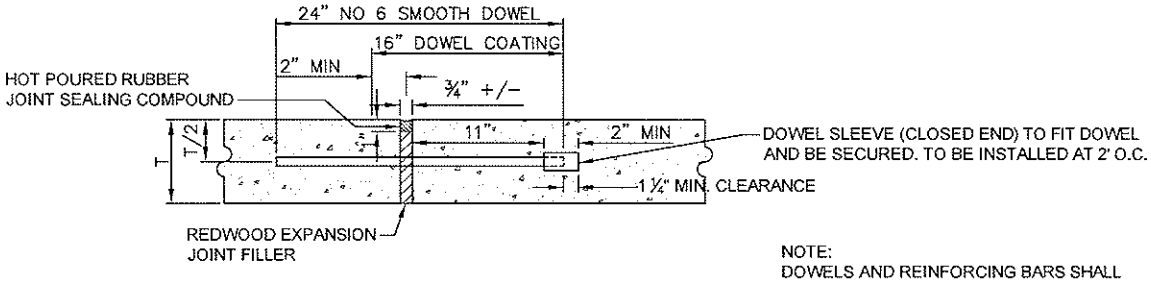

NOTE:
DOWELS AND REINFORCING BARS SHALL
BE SUPPORTED BY AN APPROVED DEVICE.

TRANSVERSE EXPANSION JOINT

(SPACED 600 FT MAXIMUN - LOCATE AT INTERSECTIONS)

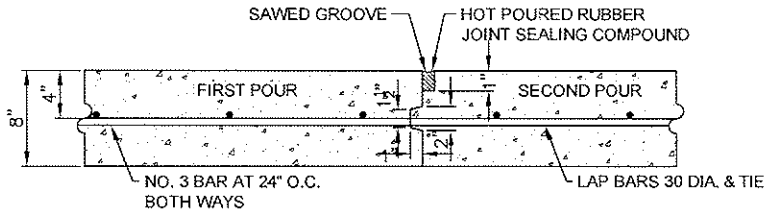

CONSTRUCTION JOINT FOR 8" PAVEMENT

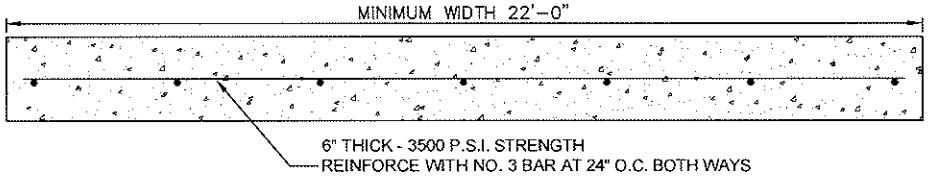

FIRE LANE PAVING & JOINT DETAIL

FOR USE WITHIN COMMERCIAL, INDUSTRIAL, OFFICE
AND NON-PUBLIC MAINTENANCE FACILITIES

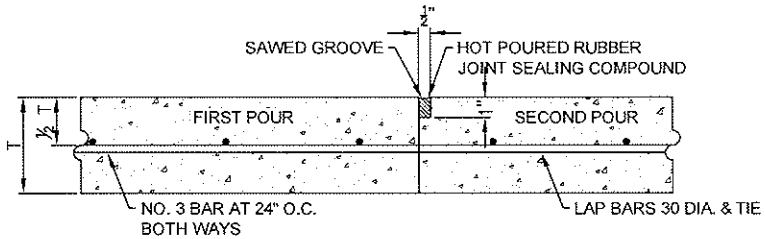

CONSTRUCTION JOINT FOR 5", 6" OR 7" PAVEMENT

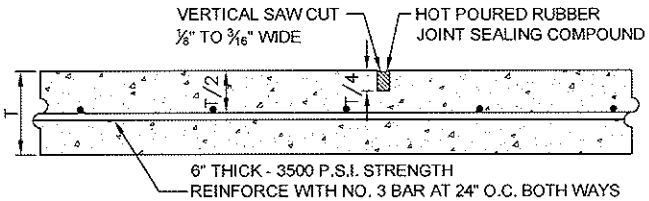

SAWED DUMMY JOINT

CITY OF SACHSE, TEXAS DEPARTMENT OF ENGINEERING		
STANDARD CONSTRUCTION DETAILS PAVING		
PAVEMENT JOINTS		
APPROVED:		
DATE: NOVEMBER 2008	REVISED:	Page 3

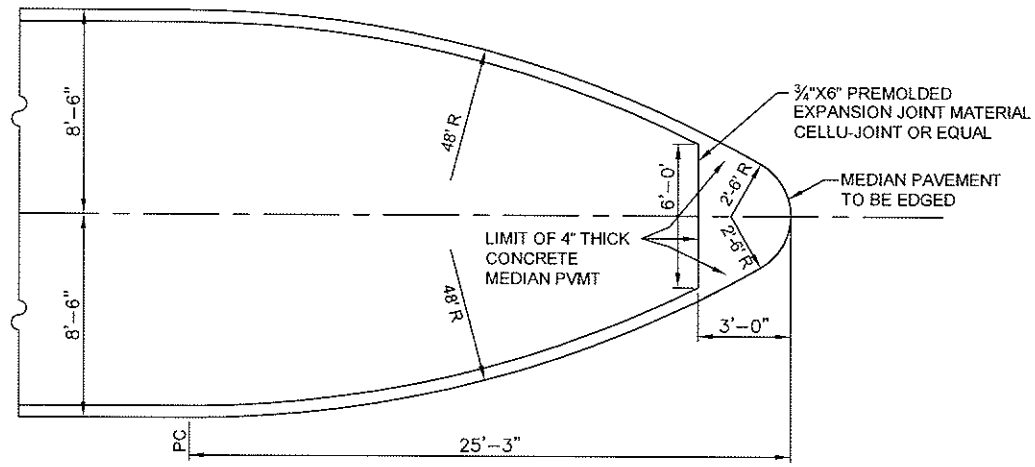

DETAIL OF NOSE FOR 17' WIDE MEDIAN ISLAND

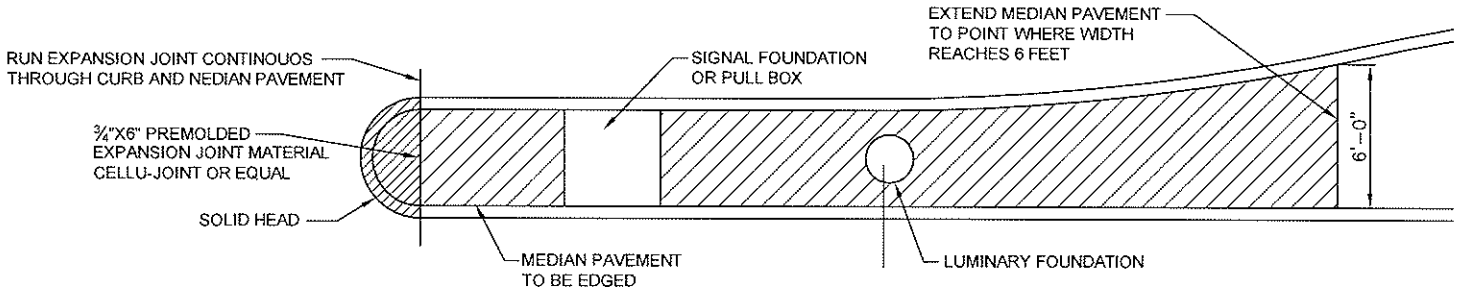

DETAIL OF MEDIAN PAVEMENT

CITY OF SACHSE, TEXAS DEPARTMENT OF ENGINEERING		
STANDARD CONSTRUCTION DETAILS PAVING		
PAVEMENT JOINTS		
APPROVED:		
DATE: NOVEMBER 2008	REVISED:	Page 4

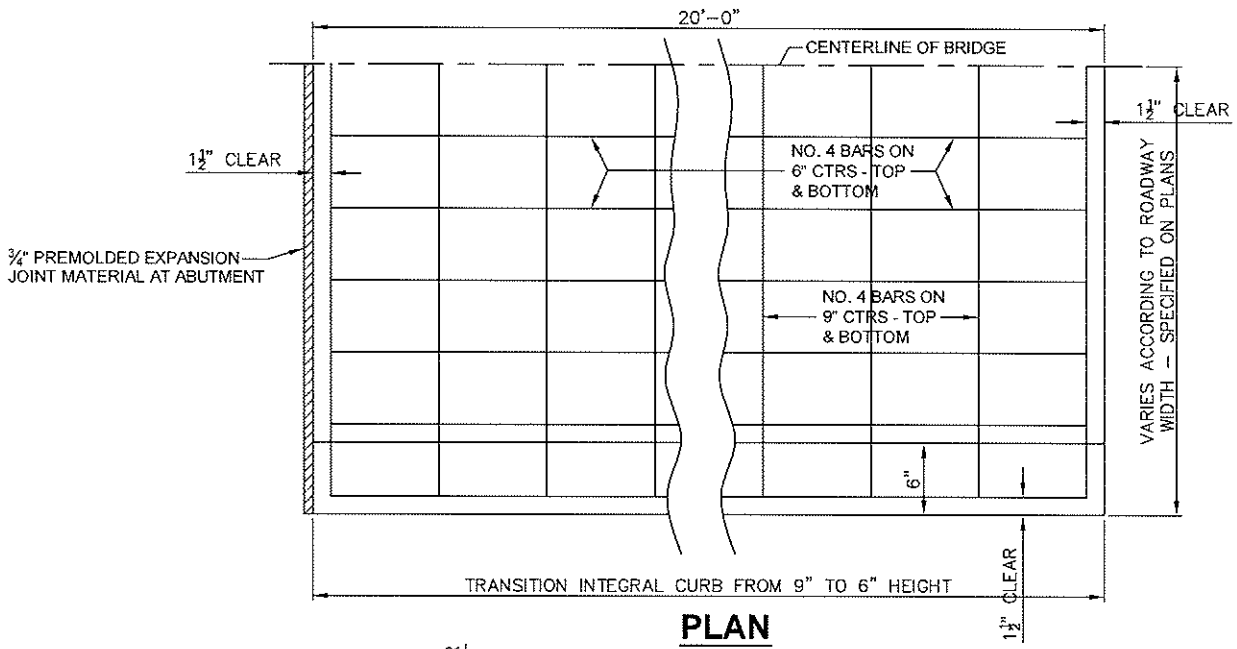

PLAN

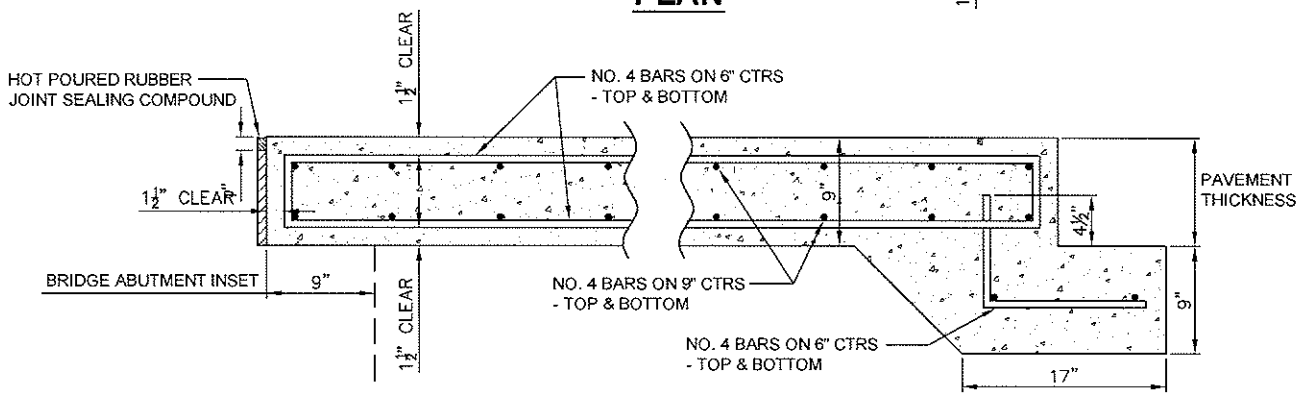

SECTION

BRIDGE APPROACH SLAB

CITY OF SACHSE, TEXAS DEPARTMENT OF ENGINEERING		
STANDARD CONSTRUCTION DETAILS PAVING		
PAVEMENT JOINTS		
APPROVED:		
DATE: NOVEMBER 2008	REVISED:	Page 5

SECTION 2-C SIDEWALKS & BARRIER FREE RAMPS

CITY OF SACHSE, TEXAS DEPARTMENT OF ENGINEERING		
STANDARD CONSTRUCTION DETAILS PAVING		
SIDEWALKS & BARRIER FREE RAMP		
APPROVED:		
DATE: NOVEMBER 2008	REVISED:	Page 1

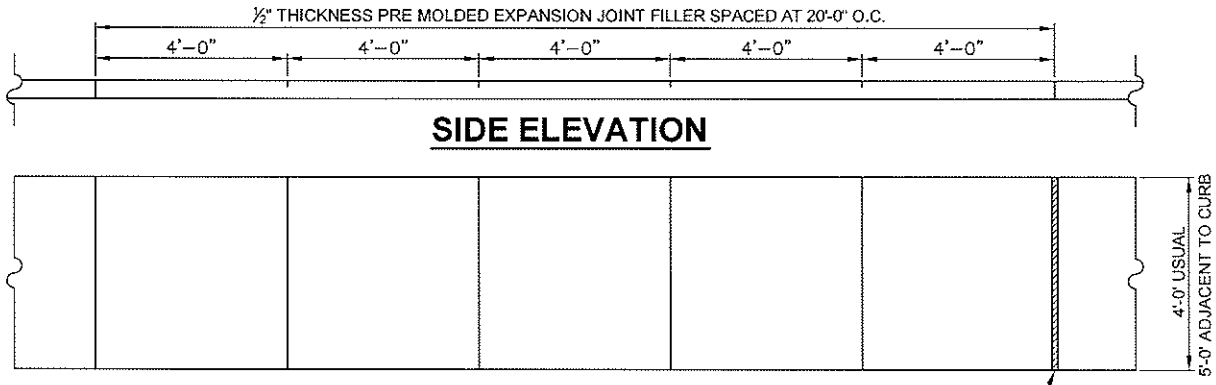

SIDE ELEVATION

PLAN

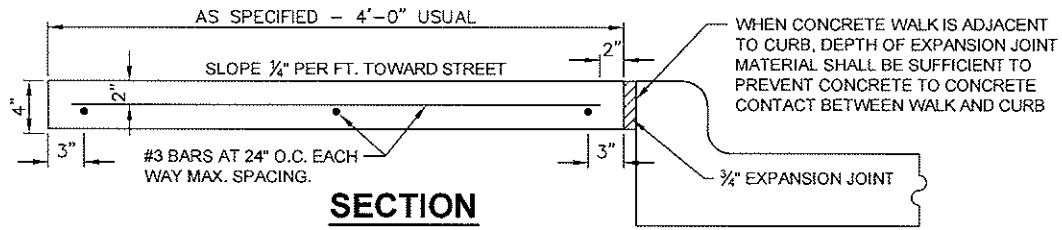

SECTION

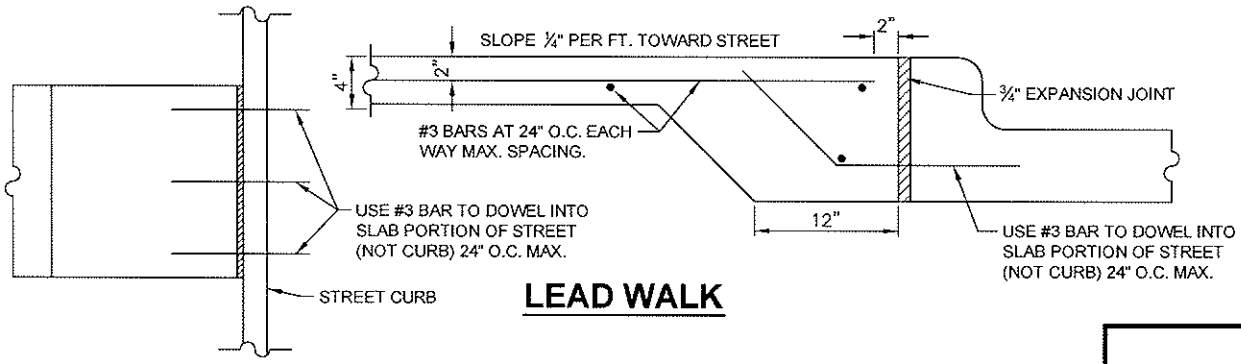

LEAD WALK

NOTE: SELECT MATERIAL (EXC. SAND) MAY BE PLACED UNDER CONCRETE SIDEWALK FOR GRADING PURPOSES TO ACHIEVE A UNIFORM SURFACE OR SUBGRADE UPON WHICH TO PLACE CONCRETE.

CONCRETE SIDEWALK

CITY OF SACHSE, TEXAS DEPARTMENT OF ENGINEERING	
STANDARD CONSTRUCTION DETAILS PAVING	
SIDEWALKS & BARRIER FREE RAMP	
APPROVED:	
DATE: NOVEMBER 2008	REVISED:

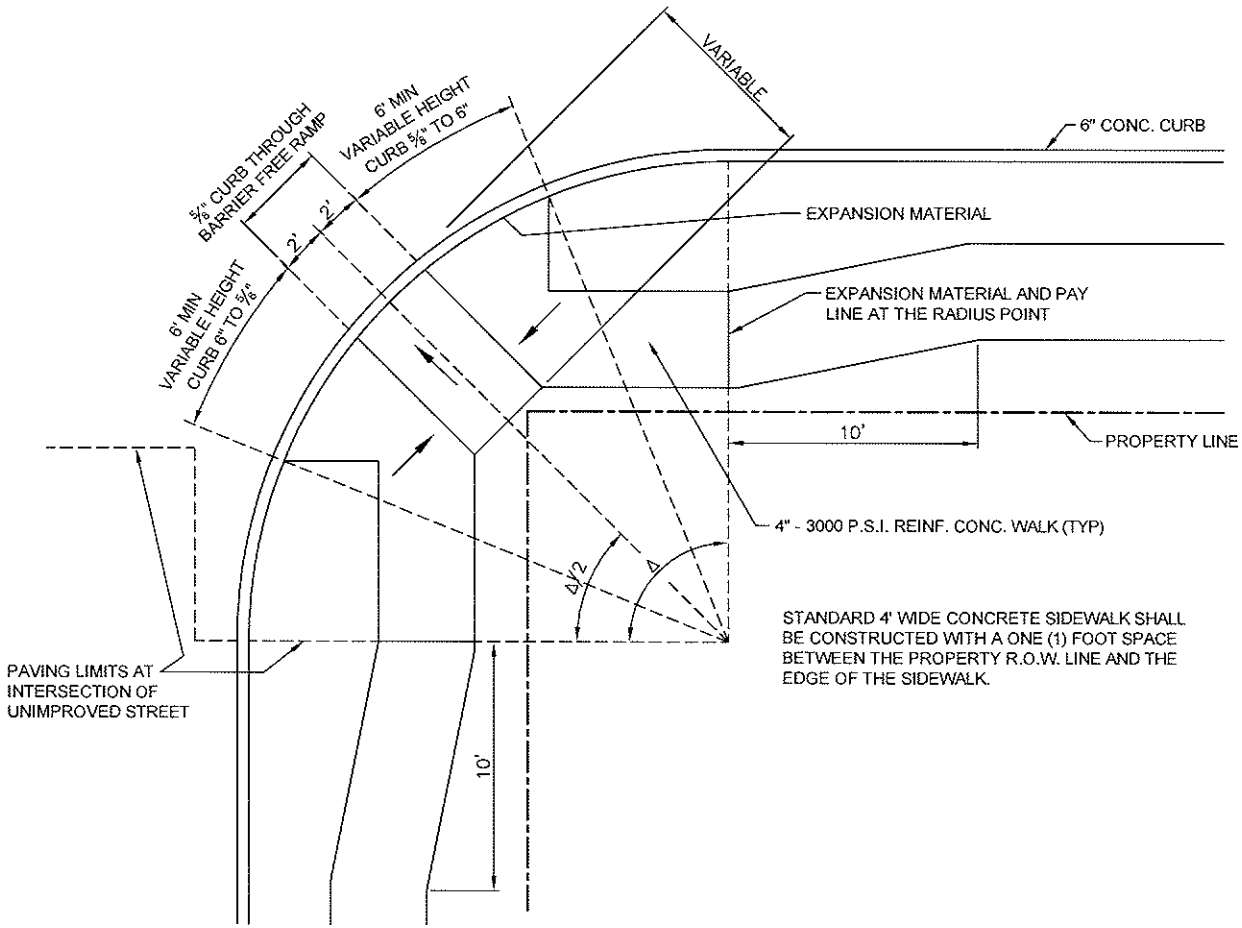

BARRIER FREE RAMP DETAIL AT INTERSECTING STREET

NOTE:

1. MAXIMUM SLOPE ON BARRIER FREE RAMPS MUST NOT EXCEED 1" PER FOOT AT ANY LOCATION.
2. DESIGNS SHOWN ARE FOR 6" CURBS, FOR CURBS WITH HEIGHT GREATER THAN 6", DIMENSIONS MUST BE INCREASED PROPORTIONATELY.
3. STREETS ON STEEP GRADE WILL REQUIRE LONGER TRANSITION OR UPGRADE SIDE.
4. LOCATION OF BARRIER FREE RAMPS MAY BE SHIFTED TO CLEAR OBSTRUCTIONS.
5. GRADE OF ANY INTERSECTING DRIVE FROM GUTTER LINE OF STREET TO PROPERTY LINE MUST NOT EXCEED 8%.
6. BRICK PAVERS SHALL BE PAVESTONE ADA COMPLIANT DETECTABLE (PRODUCT 200) IN ANTIQUE RED, CONSTRUCTED IN A PARQUET PATTERN. PAVERS SHALL BE INSTALLED IN ACCORDANCE WITH PAVESTONE'S INSTALLATION PROCEDURES.

CITY OF SACHSE, TEXAS DEPARTMENT OF ENGINEERING		
STANDARD CONSTRUCTION DETAILS PAVING		
BARRIER FREE RAMP		
APPROVED:		
DATE: NOVEMBER 2008	REVISED:	Page 3

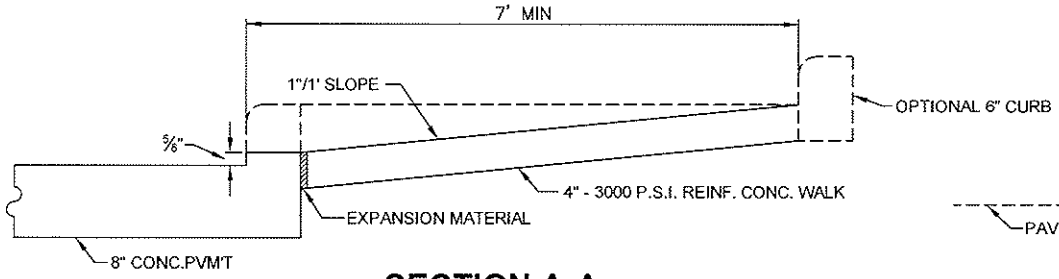

SECTION A-A

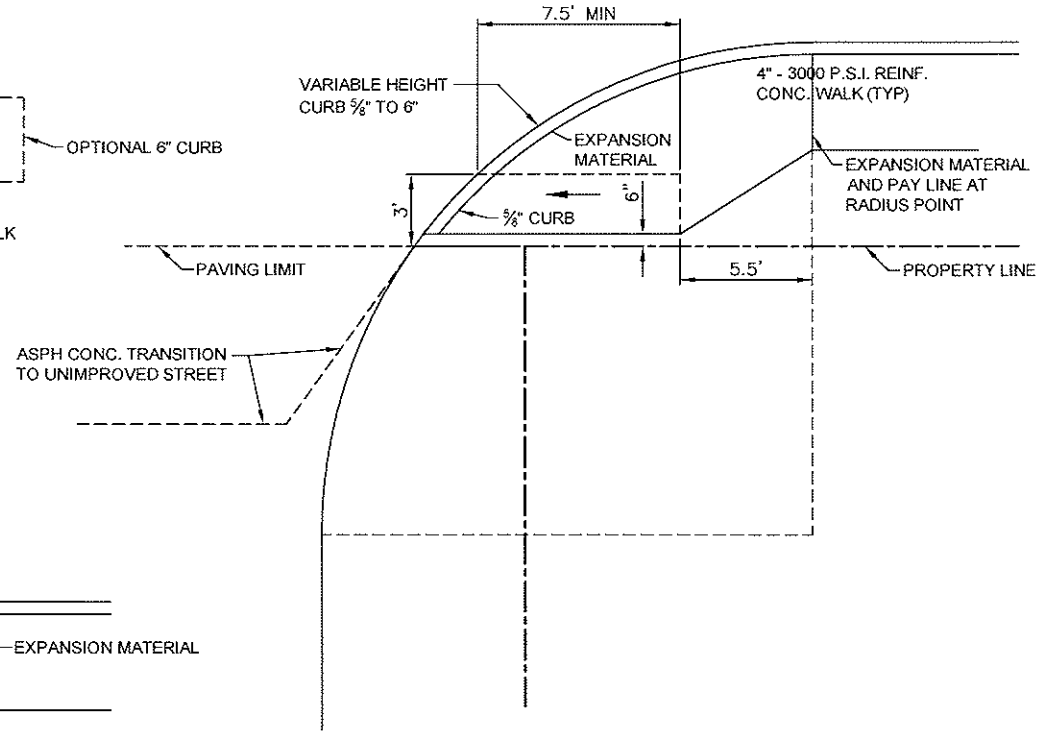

BARRIER FREE RAMP AT INTERSECTING WITH RESTRICTED RIGHT OF WAY

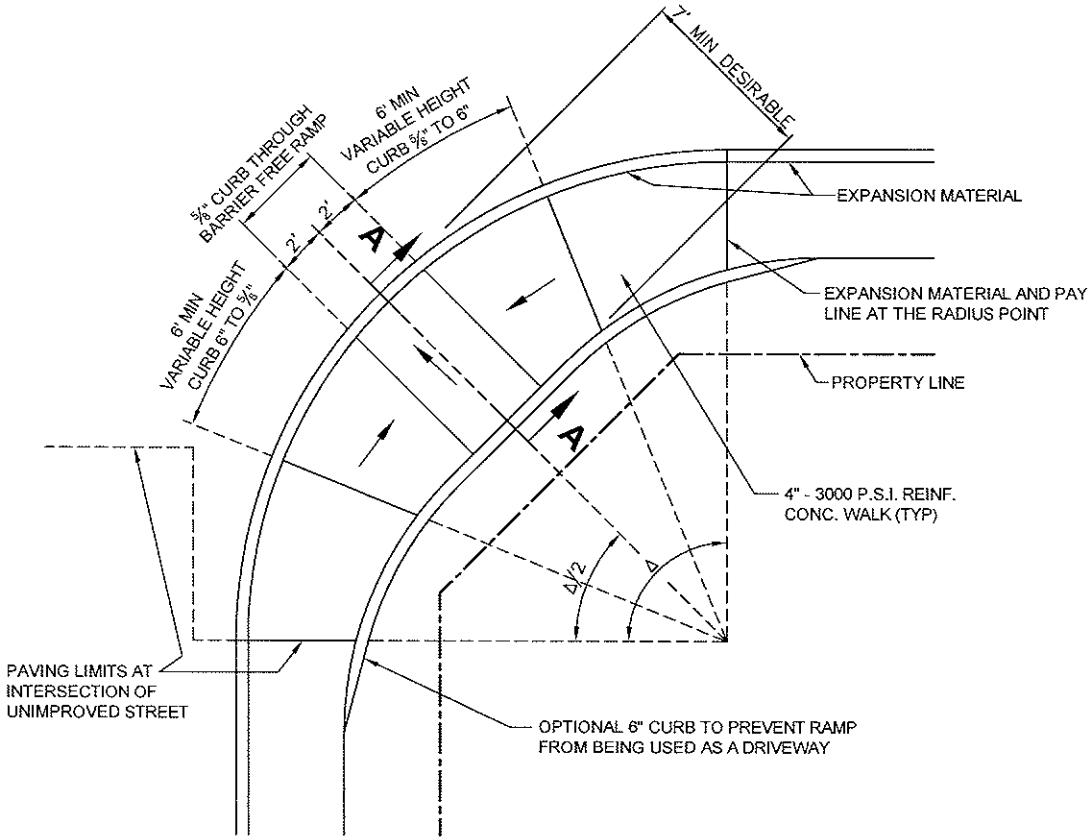

BARRIER FREE RAMP DETAIL AT INTERSECTING STREET

(WALK ABUTTING CURB)

CITY OF SACHSE, TEXAS DEPARTMENT OF ENGINEERING	
STANDARD CONSTRUCTION DETAILS PAVING	
BARRIER FREE RAMP	
APPROVED:	
DATE: NOVEMBER 2008	REVISED:

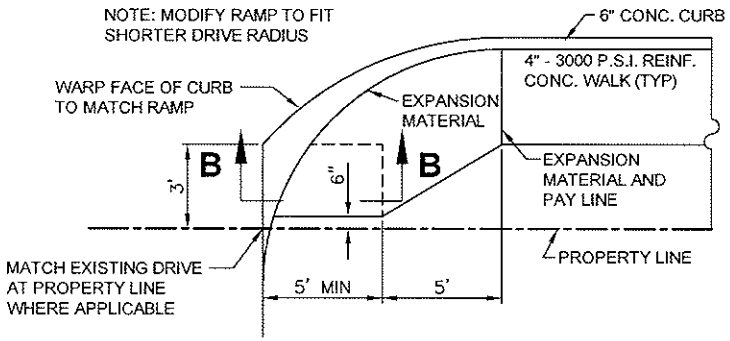

BARRIER FREE RAMP DETAIL AT DRIVE

(WALK ABUTTING CURB)

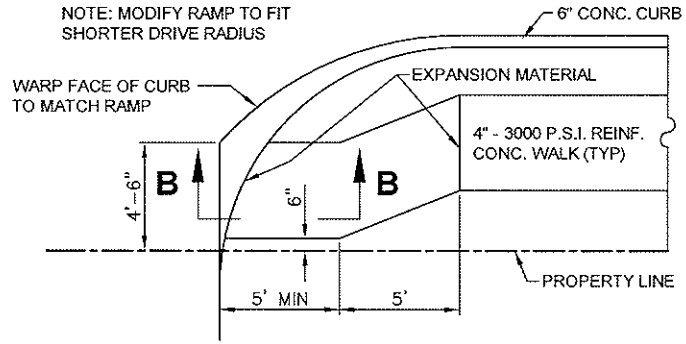

BARRIER FREE RAMP AT DRIVE

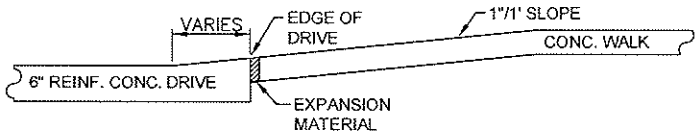

SECTION B-B

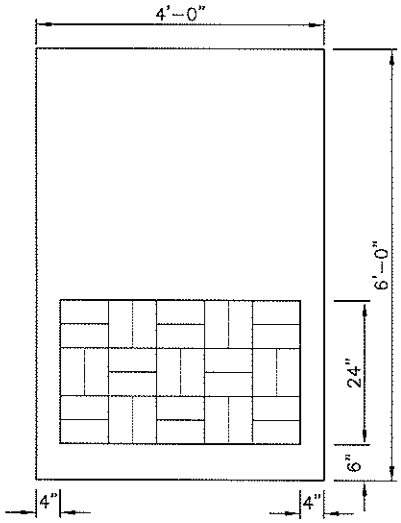

BRICK PAVER AREA TEXTURE DETAIL

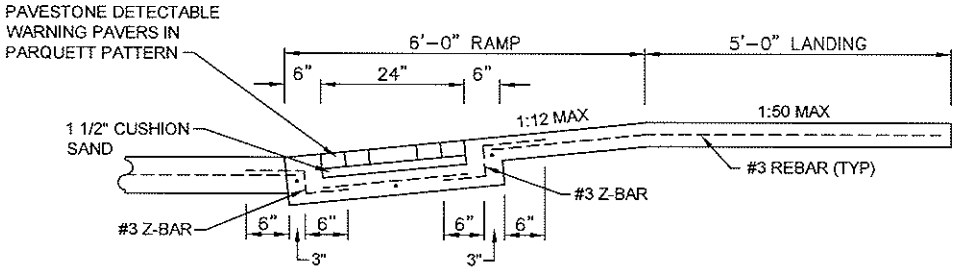

BRICK PAVER AREA SECTION

CITY OF SACHSE, TEXAS DEPARTMENT OF ENGINEERING	
STANDARD CONSTRUCTION DETAILS PAVING	
BARRIER FREE RAMP	
APPROVED:	
DATE: NOVEMBER 2008	REVISED:

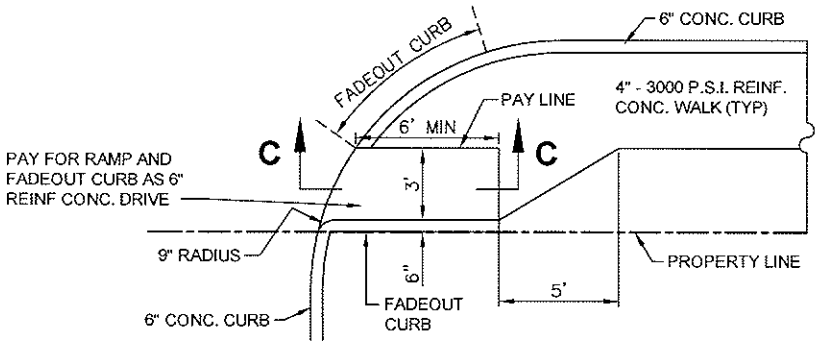

BARRIER FREE RAMP AT CURBED DRIVE

(WALK ABUTTING CURB)

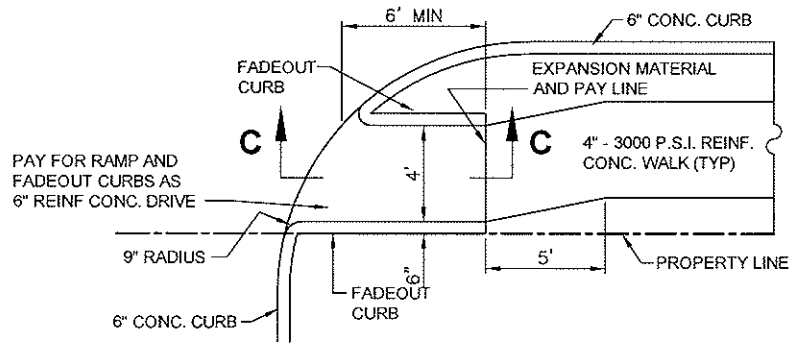

BARRIER FREE RAMP AT CURBED DRIVE

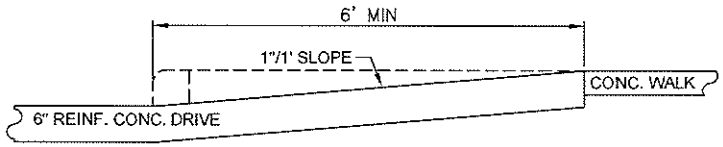

SECTION C-C

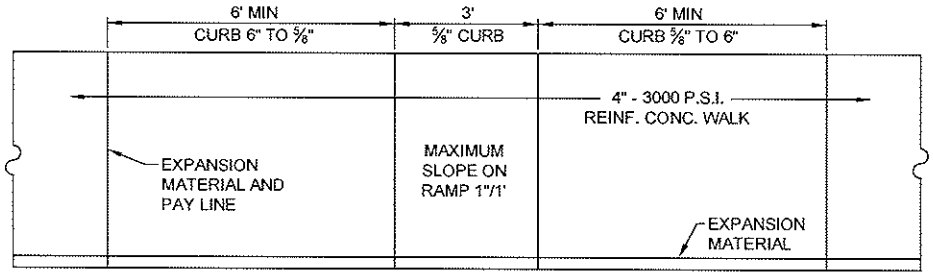

BARRIER FREE RAMP IN STRAIGHT CURB

CITY OF SACHSE, TEXAS DEPARTMENT OF ENGINEERING		
STANDARD CONSTRUCTION DETAILS PAVING		
BARRIER FREE RAMP		
APPROVED:		
DATE: NOVEMBER 2008	REVISED:	Page 6

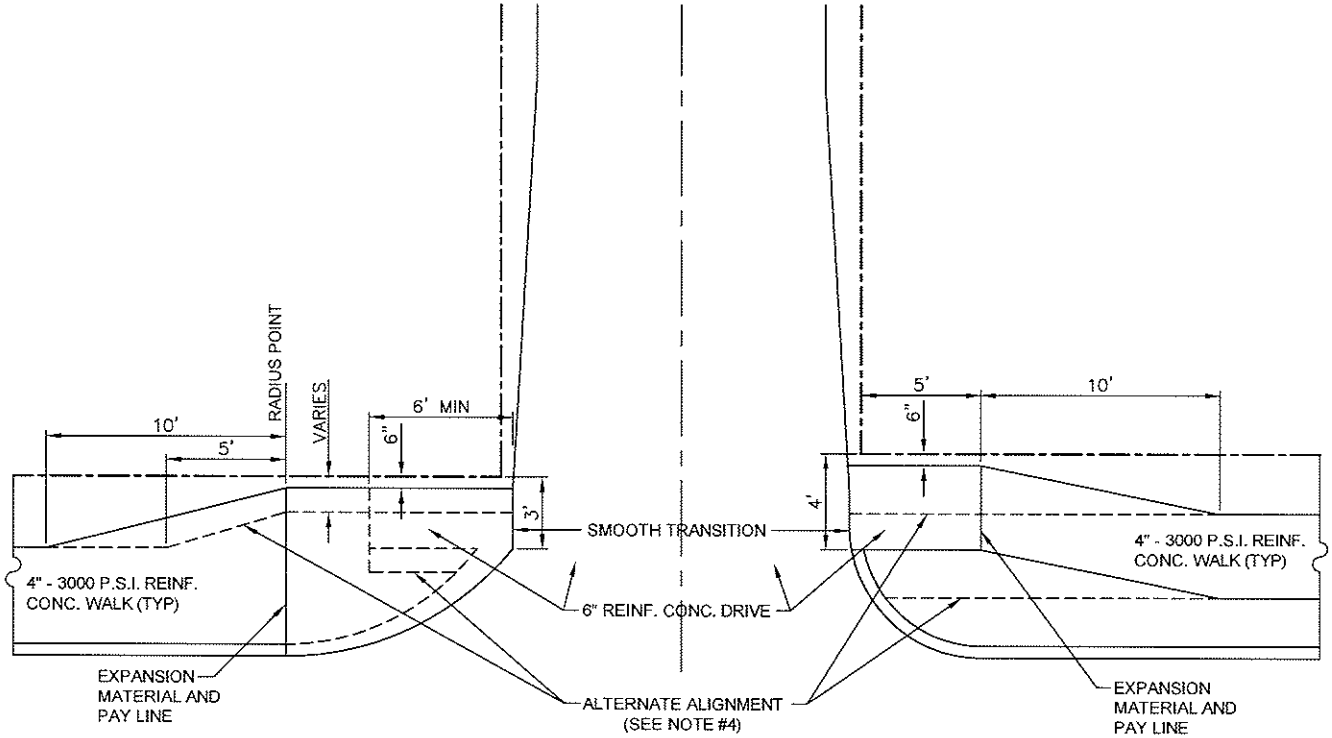

BARRIER FREE RAMPS AT ALLEYS

CITY OF SACHSE, TEXAS DEPARTMENT OF ENGINEERING	
STANDARD CONSTRUCTION DETAILS PAVING	
BARRIER FREE RAMP	
APPROVED:	
DATE: NOVEMBER 2008	REVISED:

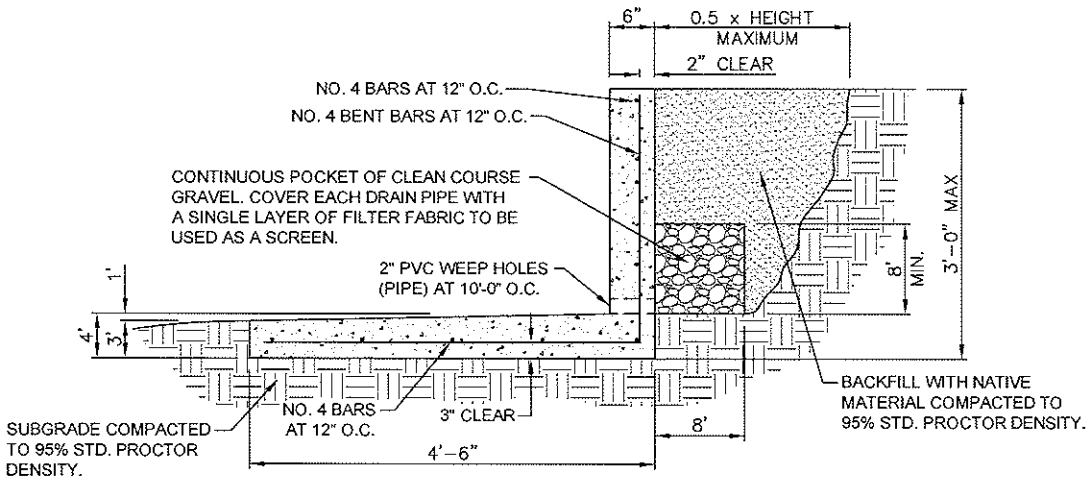

RETAINING WALL WITH INTEGRAL SIDEWALK DETAIL

NOTES

1. ALL EXPOSED EDGES SHALL HAVE A 3/4 INCH CHAMFER.
2. ALL DISTANCES TO REINFORCING BARS REFER TO CLEAR CONCRETE COVER OF BAR UNLESS NOTED OTHERWISE.
3. MINIMUM BAR LAP IS TO BE FORTY (40) BAR DIAMETERS.
4. MINIMUM GRADE OF REINFORCING STEEL IS TO BE ASTM A615 GRADE 60.
5. MINIMUM COMPRESSIVE DESIGN STRENGTH OF THE CONCRETE SHALL BE 3600 PSI, 6-SACK MIX, AT 28 DAYS.
6. MAXIMUM SPACING OF EXPANSION JOINTS SHALL BE 75'-0" CENTER TO CENTER OR ON LOT LINES.

CITY OF SACHSE, TEXAS DEPARTMENT OF ENGINEERING		
STANDARD CONSTRUCTION DETAILS PAVING		
SIDEWALKS & BARRIER FREE RAMP		
APPROVED:		
DATE: NOVEMBER 2008	REVISED:	Page 8

SECTION 2-D
ALLEY & DRIVEWAY RETURNS

CITY OF SACHSE, TEXAS DEPARTMENT OF ENGINEERING		
STANDARD CONSTRUCTION DETAILS PAVING		
ALLEY & DRIVEWAY RETURNS		
APPROVED:		
DATE: NOVEMBER 2008	REVISED:	Page 1

ALLEY WIDTH (A)	HALF SECTION WIDTH (L)	INVERT DEPTH (d)
10'	5'	3"
12'	6'	3"
20'	10'	6"

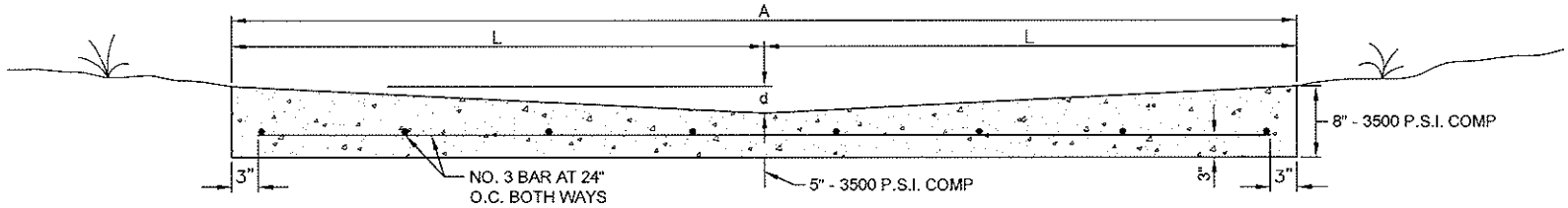

STANDARD 10' TO 20' ALLEY SECTION

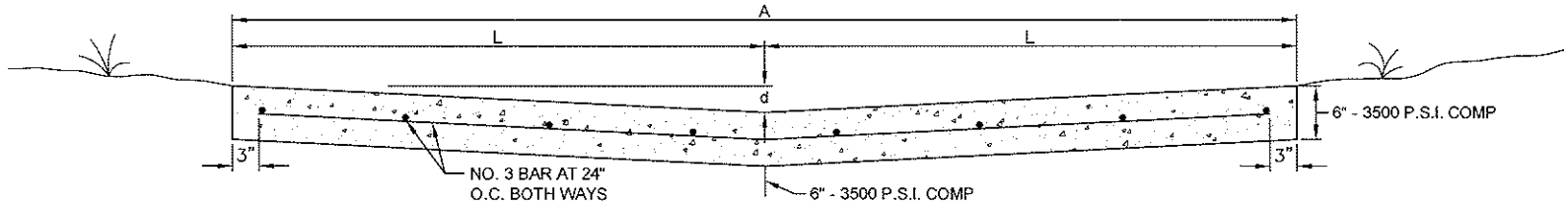

ALTERNATE ALLEY SECTION

GENERAL NOTES FOR ALLEY REQUIREMENTS AND DRIVEWAYS:

1. CONCRETE FOR ALLEY RETURNS AND DRIVEWAYS SHALL HAVE A MINIMUM COMPRESSIVE STRENGTH AT 28 DAYS IDENTICAL TO THAT SPECIFIED FOR THE STREET PAVEMENT OR BASE WHEN BUILT AS COMPONENTS OF A CONCRETE PAVING PROJECT. WHEN BUILT SEPARATELY, THE STRENGTH SHALL BE AS SPECIFIED ON THE CONSTRUCTION PLANS.
2. CONCRETE FOR ALLEY PAVEMENT SHALL BE OF THE STRENGTH SPECIFIED ON THE CONSTRUCTION PLANS (3500 P.S.I. MINIMUM COMPRESSIVE).
3. SPACING AND CONSTRUCTION JOINTS SHALL CONFORM TO STREET PAVEMENT DETAILS.
4. LIME STABILIZED SUBGRADE SHALL BE 6" THICK WITH 6% HYDRATED LIME BY UNIT DRY WEIGHT OF THE SOIL.

CITY OF SACHSE, TEXAS DEPARTMENT OF ENGINEERING		
STANDARD CONSTRUCTION DETAILS PAVING		
ALLEY & DRIVEWAY RETURNS		
APPROVED:		
DATE: NOVEMBER 2008	REVISED:	Page 2

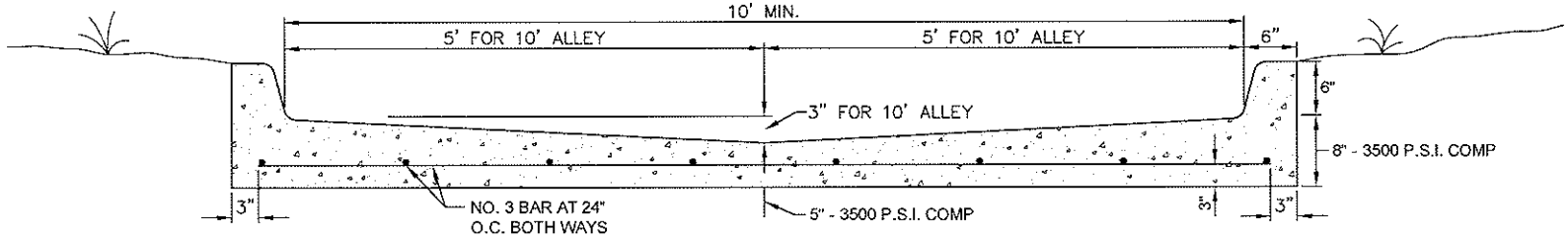

STANDARD ALLEY SECTION WITH CURBS

NOTE: CURBS NOT ALLOWED IN RESIDENTIAL AREAS EXCEPT AS APPROVED BY THE CITY

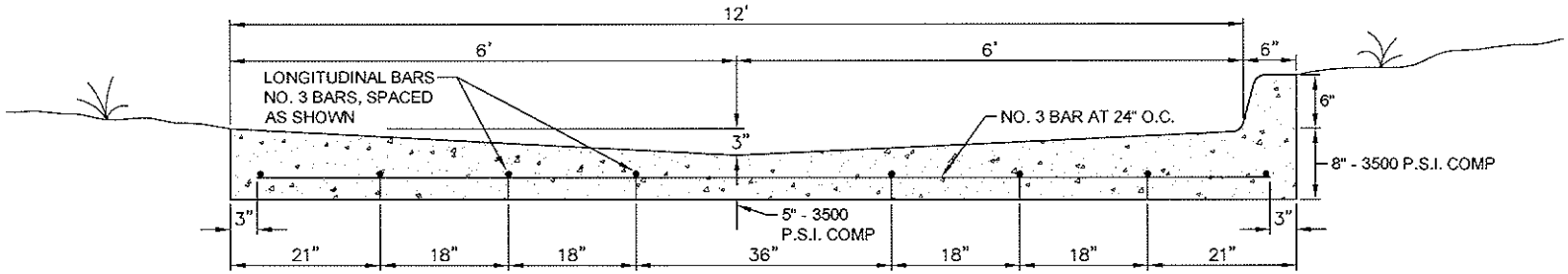

ALTERNATE 12' ALLEY SECTION/CURBS

NOTE: CURBS NOT ALLOWED IN RESIDENTIAL AREAS EXCEPT AS APPROVED BY THE CITY

CITY OF SACHSE, TEXAS DEPARTMENT OF ENGINEERING		
STANDARD CONSTRUCTION DETAILS PAVING		
ALLEY & DRIVEWAY RETURNS		
APPROVED:		
DATE: NOVEMBER 2008	REVISED:	Page 3

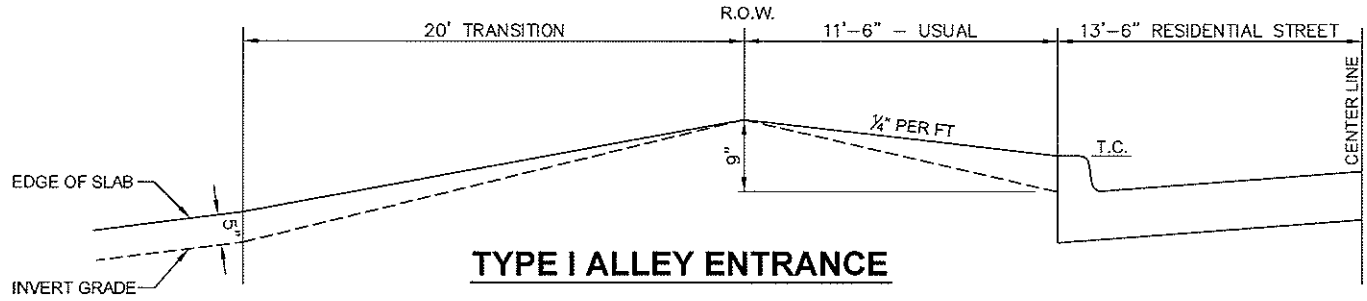

TYPE I ALLEY ENTRANCE

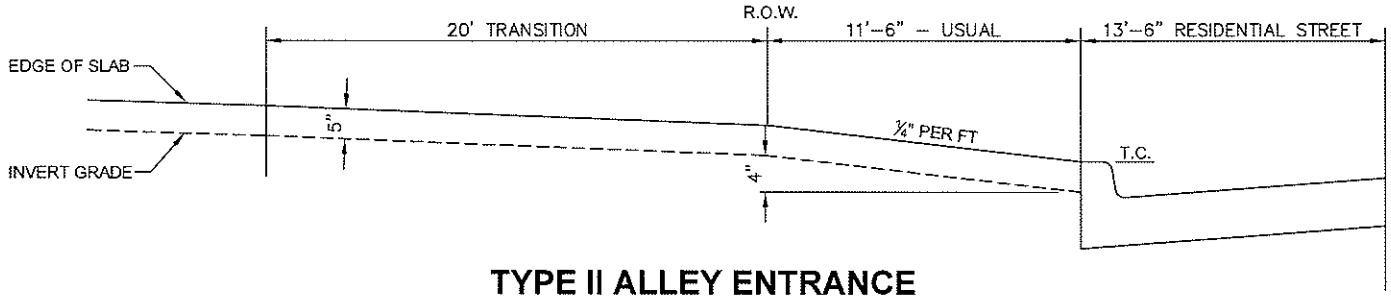

TYPE II ALLEY ENTRANCE

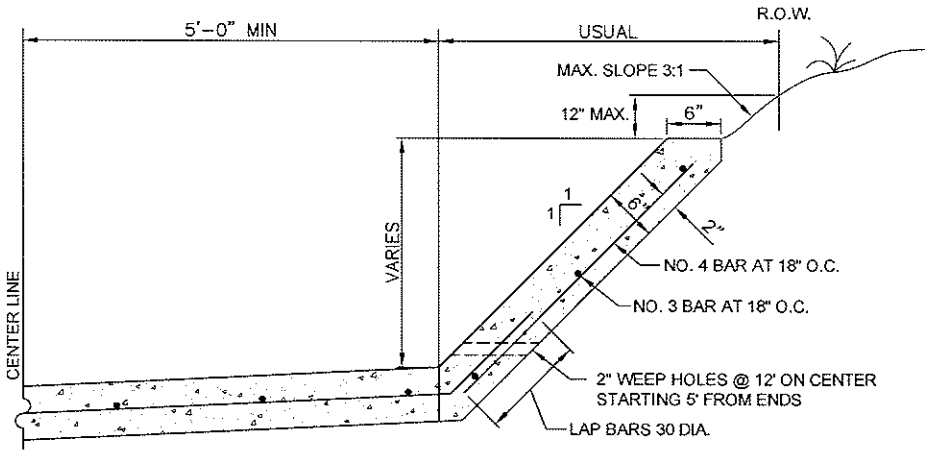

ALLEY SLOPE PROTECTION

REQUIRED WHERE SLOPE OF GROUND IS GREATER THAN 3:1

CITY OF SACHSE, TEXAS DEPARTMENT OF ENGINEERING		
STANDARD CONSTRUCTION DETAILS PAVING		
ALLEY & DRIVEWAY RETURNS		
APPROVED:		
DATE: NOVEMBER 2008	REVISED:	Page 4

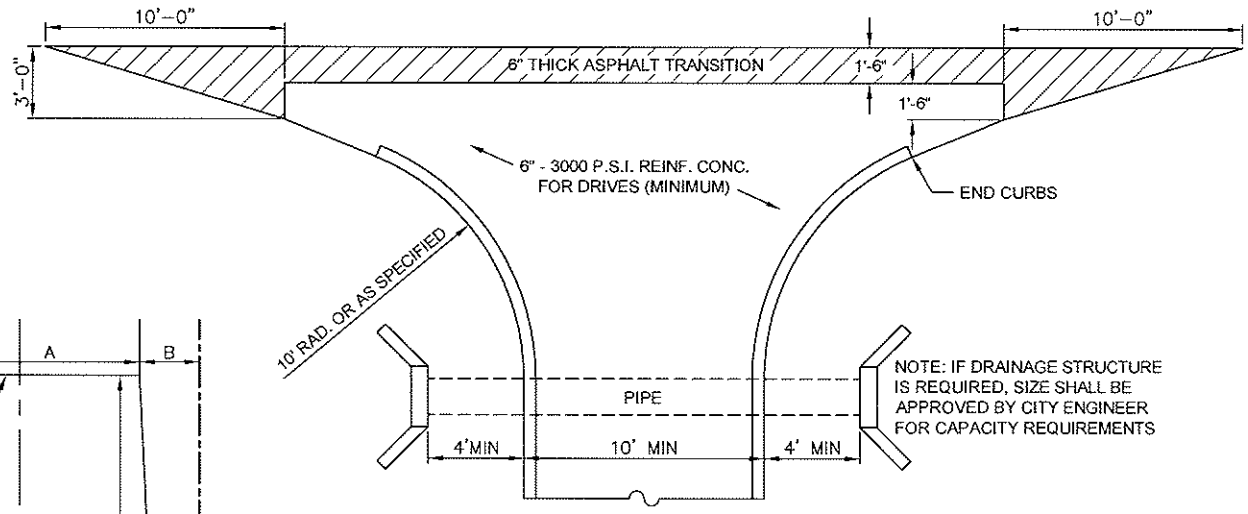

TYPICAL DRIVE OR STREET CONNECTION TO EXISTING ASPHALT STREET

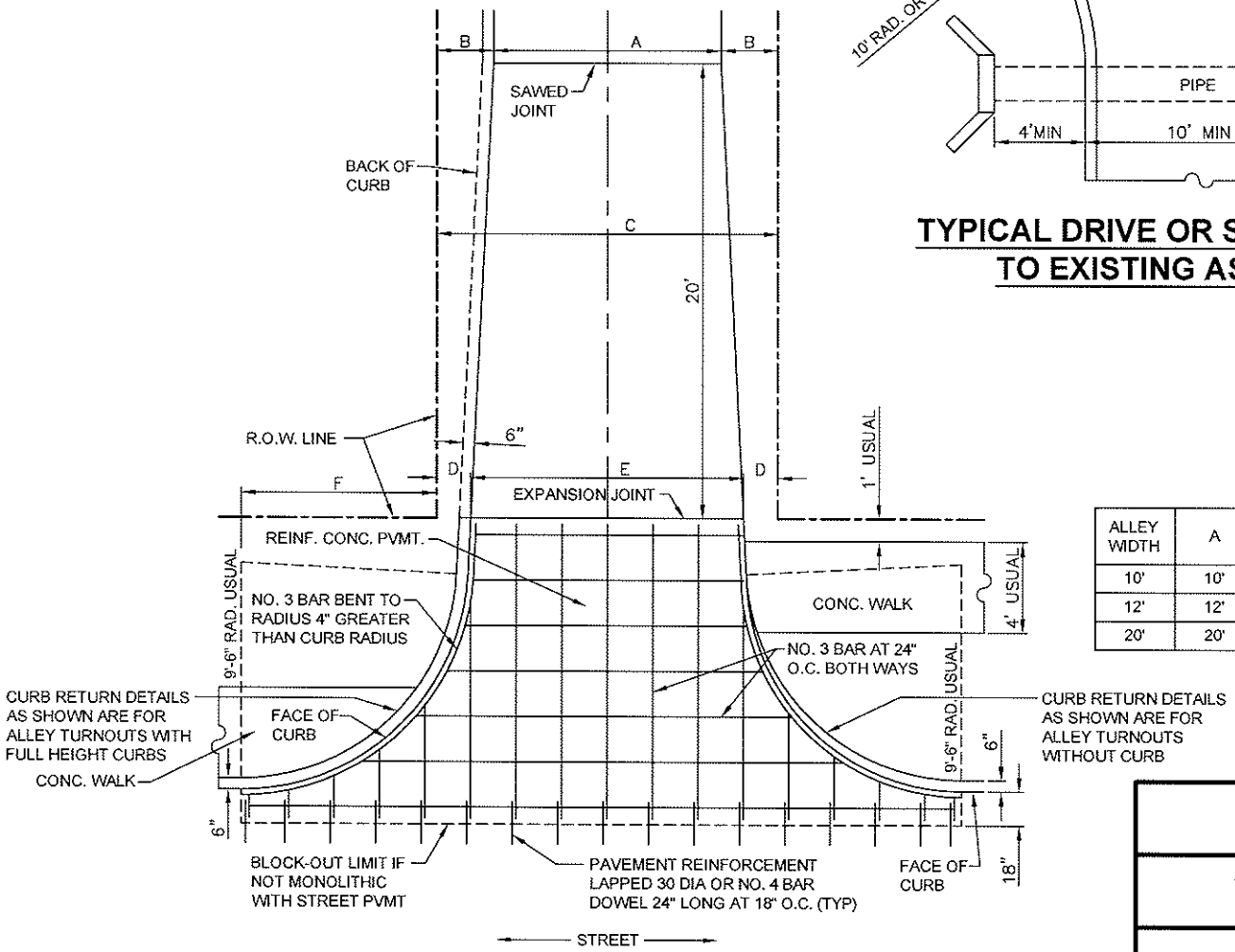

ALLEY WIDTH	A	B	C	D	E	F
10'	10'	2'-6"	15'	1'-6"	12'	8'-6"
12'	12'	1'-6"	15'	1'-6"	12'	8'-6"
20'	20'	0	20'	0	20'	10'

ALLEY RETURN DETAILS

CITY OF SACHSE, TEXAS
DEPARTMENT OF ENGINEERING

STANDARD CONSTRUCTION DETAILS
PAVING

ALLEY & DRIVEWAY RETURNS

APPROVED:

DATE: NOVEMBER 2008 | REVISED:

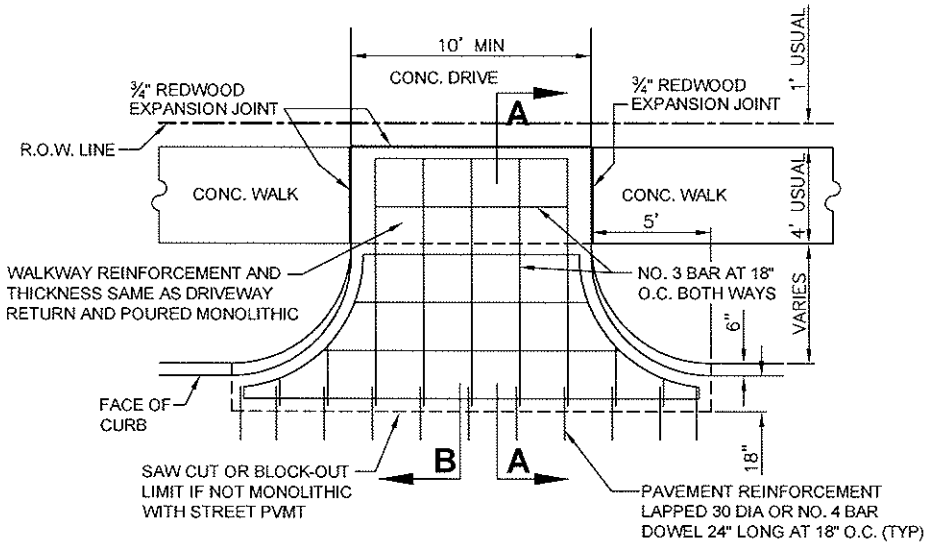

DRIVEWAY RETURN TYPE I

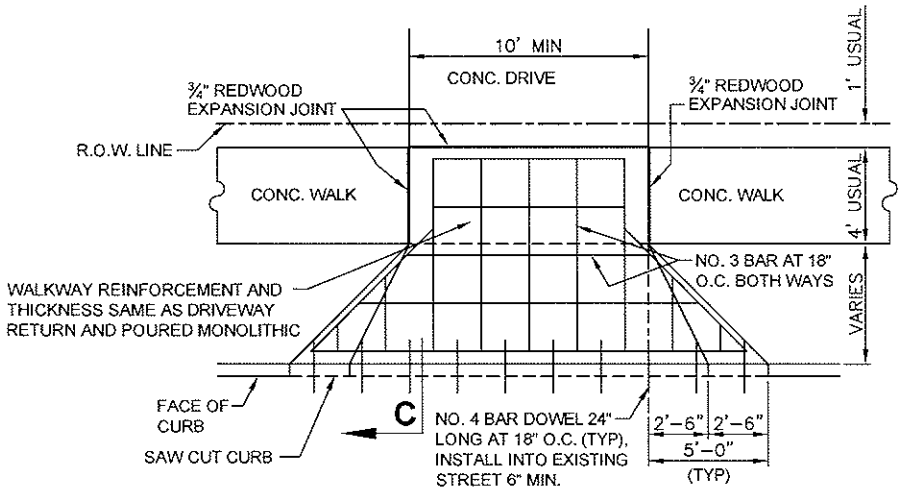

DRIVEWAY RETURN TYPE II

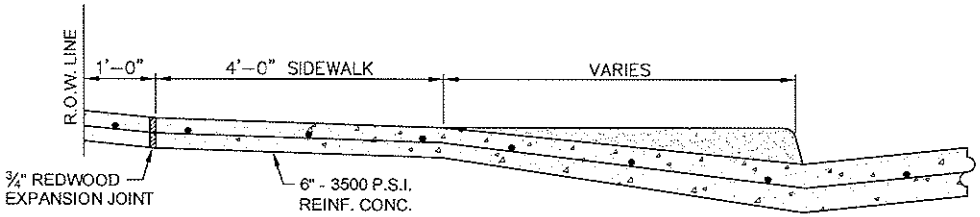

SECTION A-A

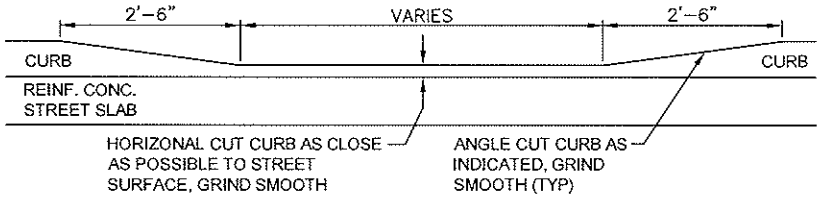

CURB CUT FOR DRIVEWAY RETURN TYPE II

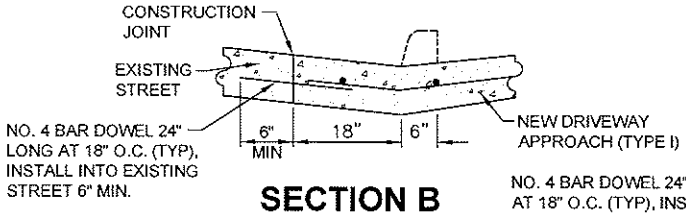

SECTION B

NOTE: IF SIDEWALK EXIST IN PATH OF DRIVEWAY, REMOVE AND REPOUR WITH APPROACH - MONOLITHIC

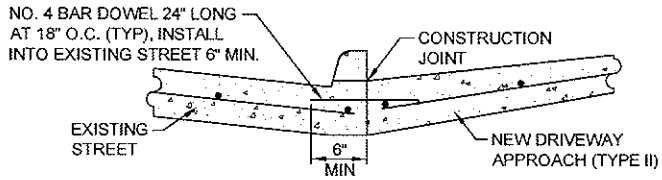

SECTION C

DRIVEWAY RETURN DETAILS

CITY OF SACHSE, TEXAS DEPARTMENT OF ENGINEERING	
STANDARD CONSTRUCTION DETAILS PAVING	
ALLEY & DRIVEWAY RETURNS	
APPROVED:	
DATE: NOVEMBER 2008	REVISED:

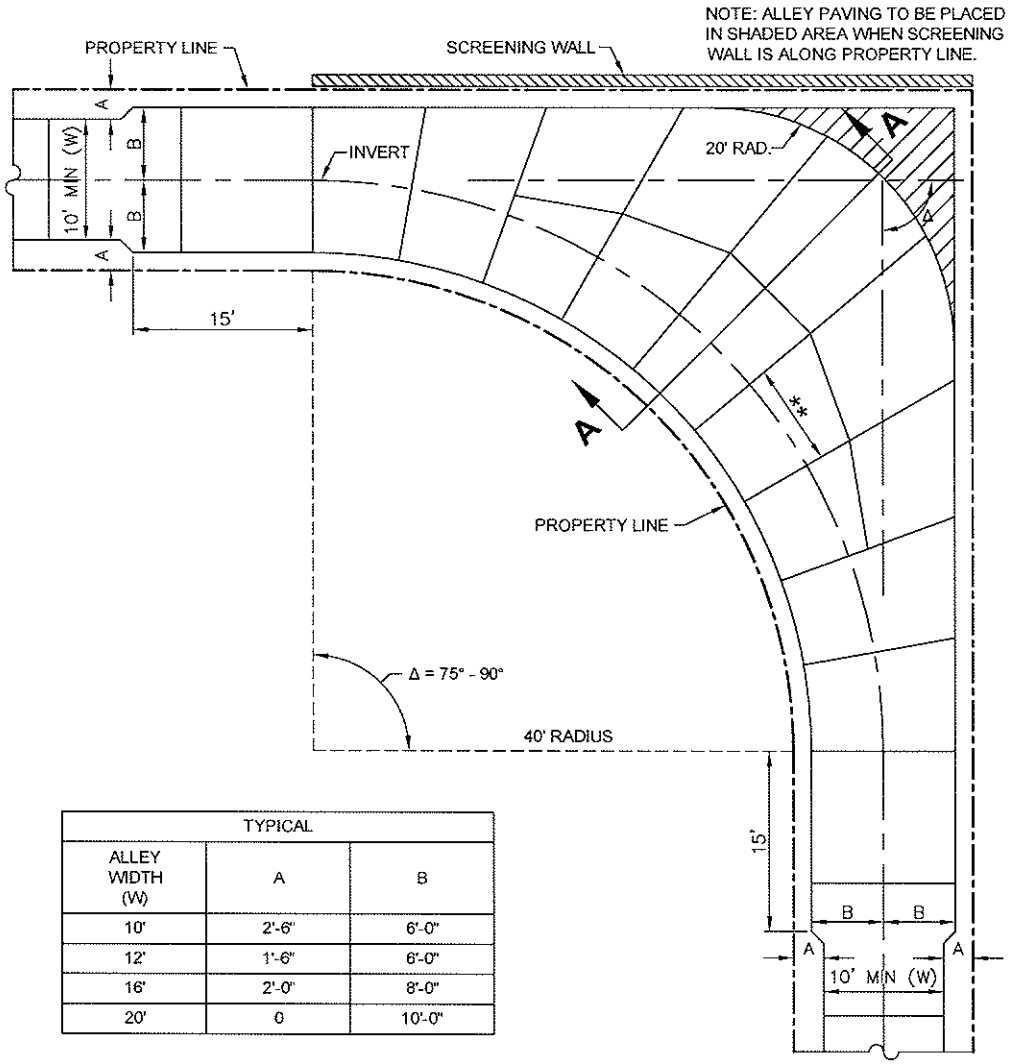

TYPICAL		
ALLEY WIDTH (W)	A	B
10'	2'-6"	6'-0"
12'	1'-6"	6'-0"
16'	2'-0"	8'-0"
20'	0	10'-0"

ALLEY TURN 75° - 90°

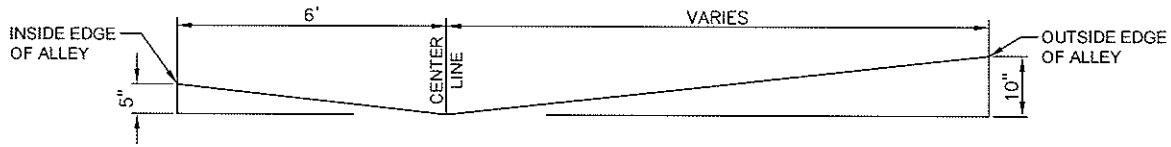

SECTION A-A

CITY OF SACHSE, TEXAS
DEPARTMENT OF ENGINEERING

STANDARD CONSTRUCTION DETAILS
PAVING

ALLEY & DRIVEWAY RETURNS

APPROVED:

DATE: NOVEMBER 2008 | REVISED:

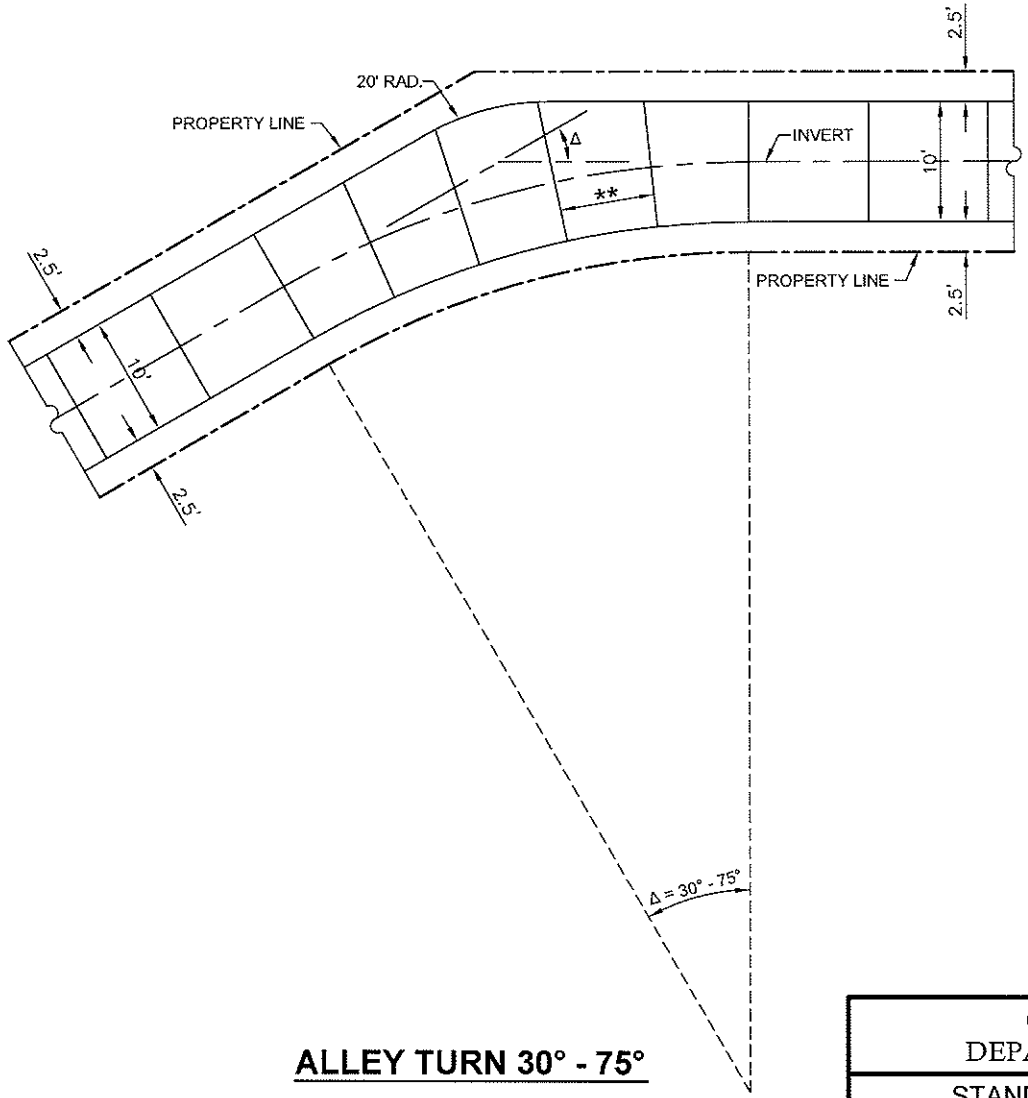

ALLEY TURN 30° - 75°

CITY OF SACHSE, TEXAS DEPARTMENT OF ENGINEERING
STANDARD CONSTRUCTION DETAILS PAVING
ALLEY & DRIVEWAY RETURNS
APPROVED:
DATE: NOVEMBER 2008 REVISED:

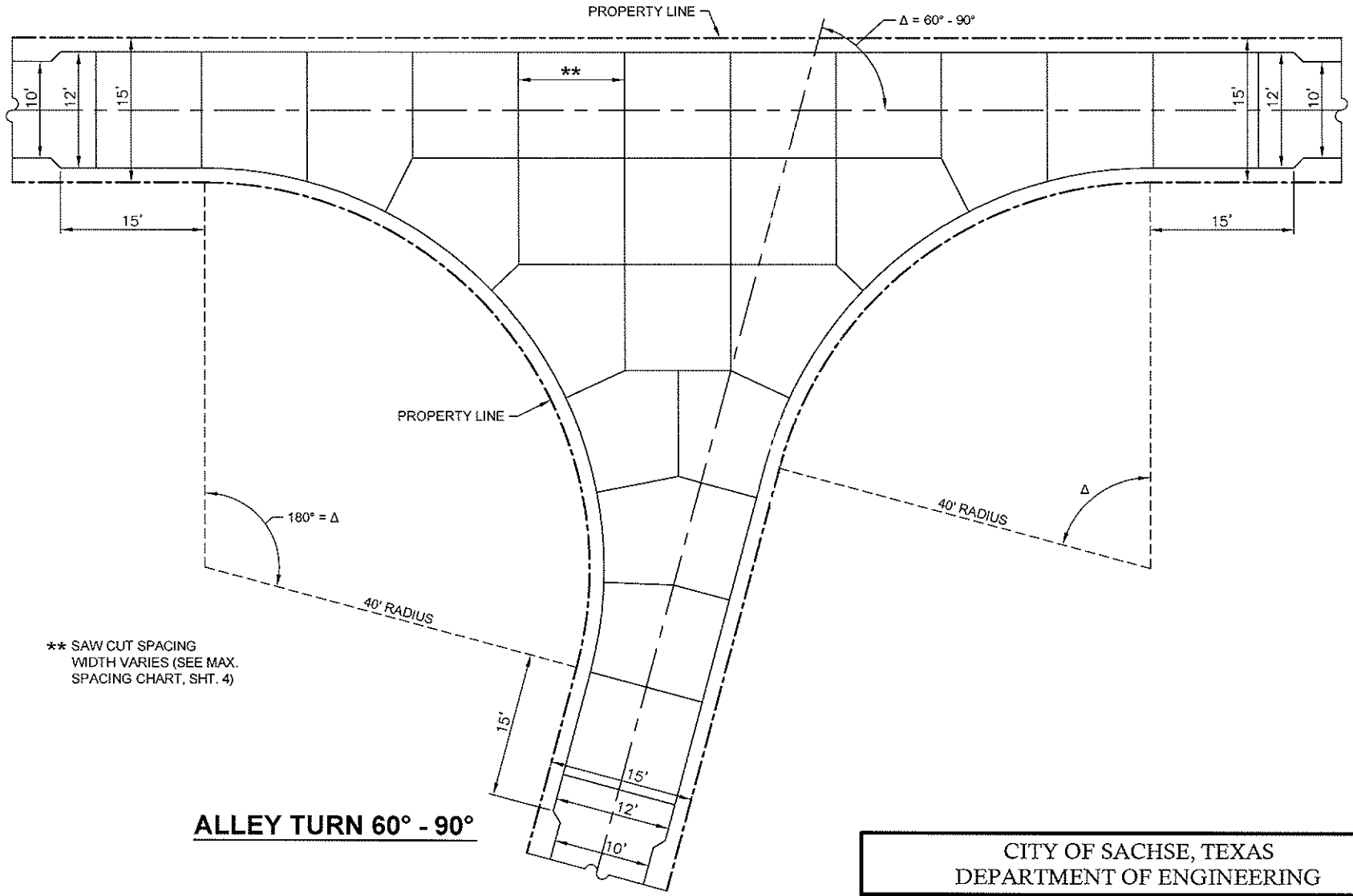

ALLEY TURN 60° - 90°

CITY OF SACHSE, TEXAS DEPARTMENT OF ENGINEERING		
STANDARD CONSTRUCTION DETAILS PAVING		
ALLEY & DRIVEWAY RETURNS		
APPROVED:		
DATE: NOVEMBER 2008	REVISED:	Page 9

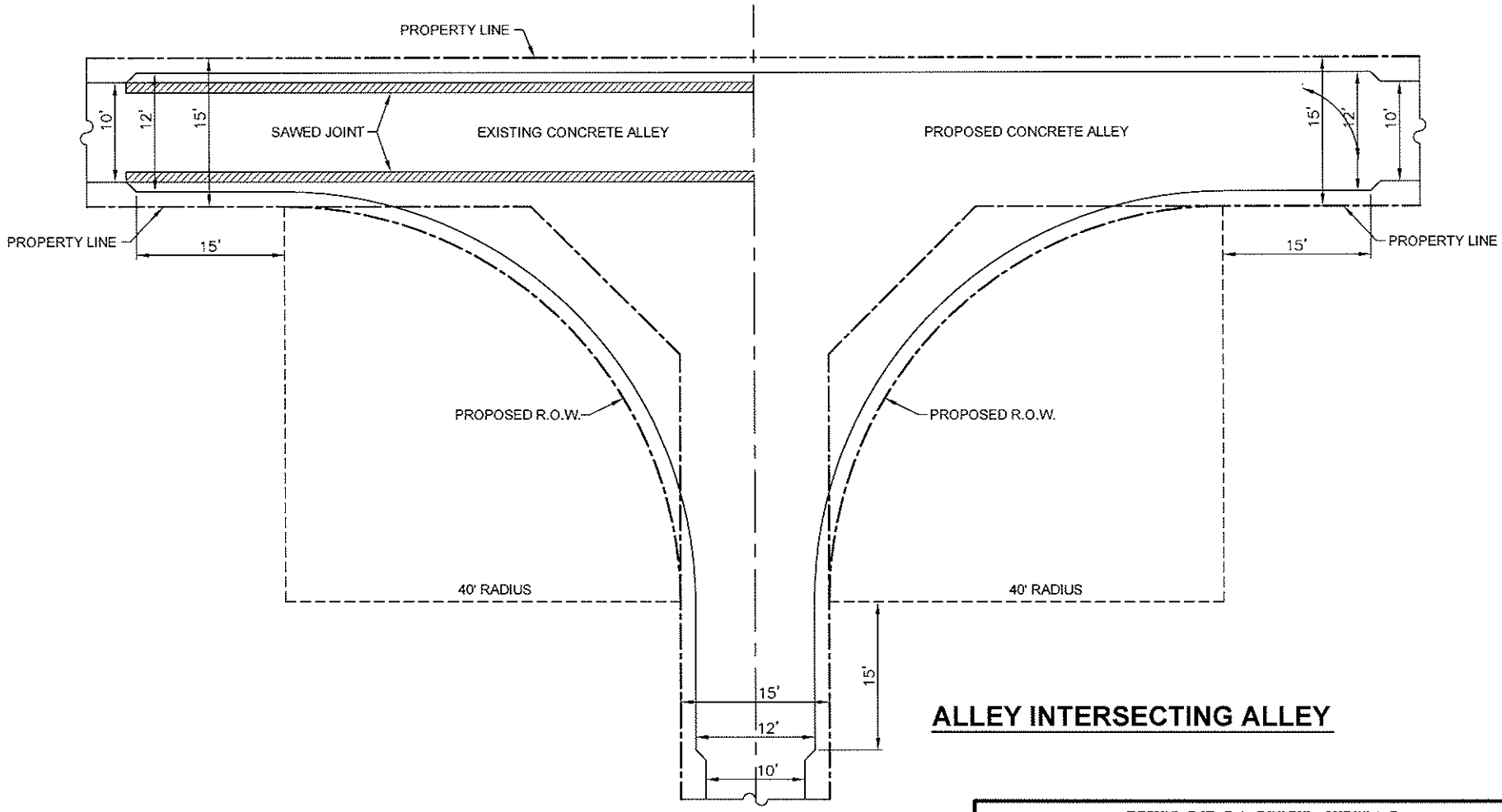

ALLEY INTERSECTING ALLEY

CITY OF SACHSE, TEXAS DEPARTMENT OF ENGINEERING	
STANDARD CONSTRUCTION DETAILS PAVING	
ALLEY & DRIVEWAY RETURNS	
APPROVED:	
DATE: NOVEMBER 2008	REVISED:

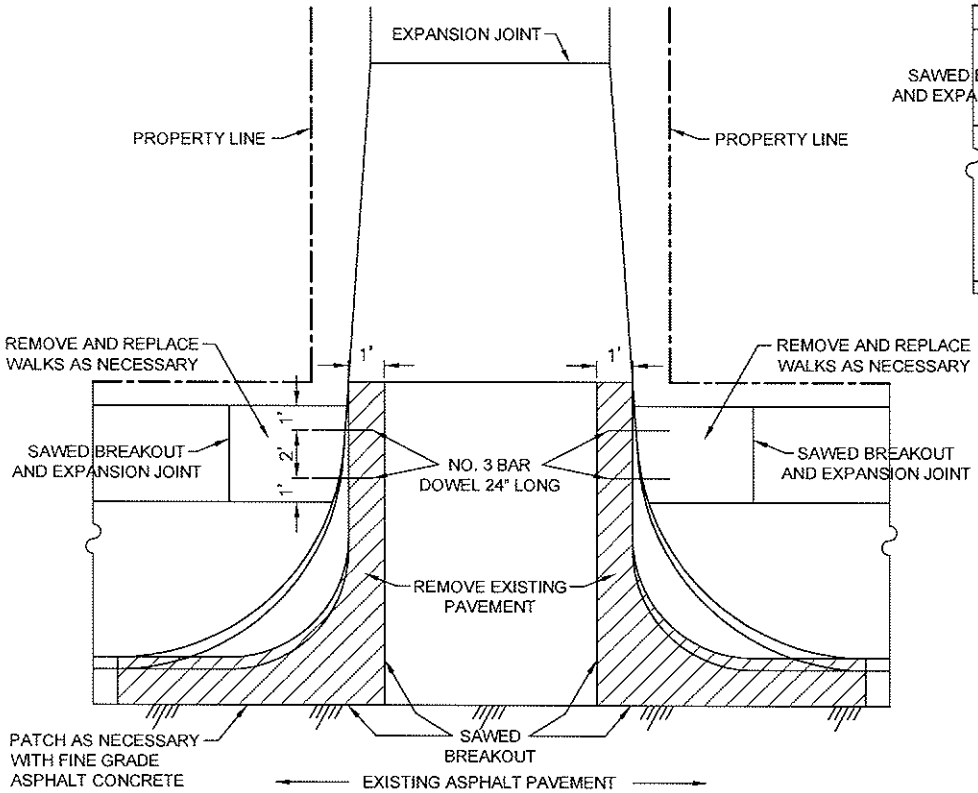

RETURN AT CONCRETE STREET

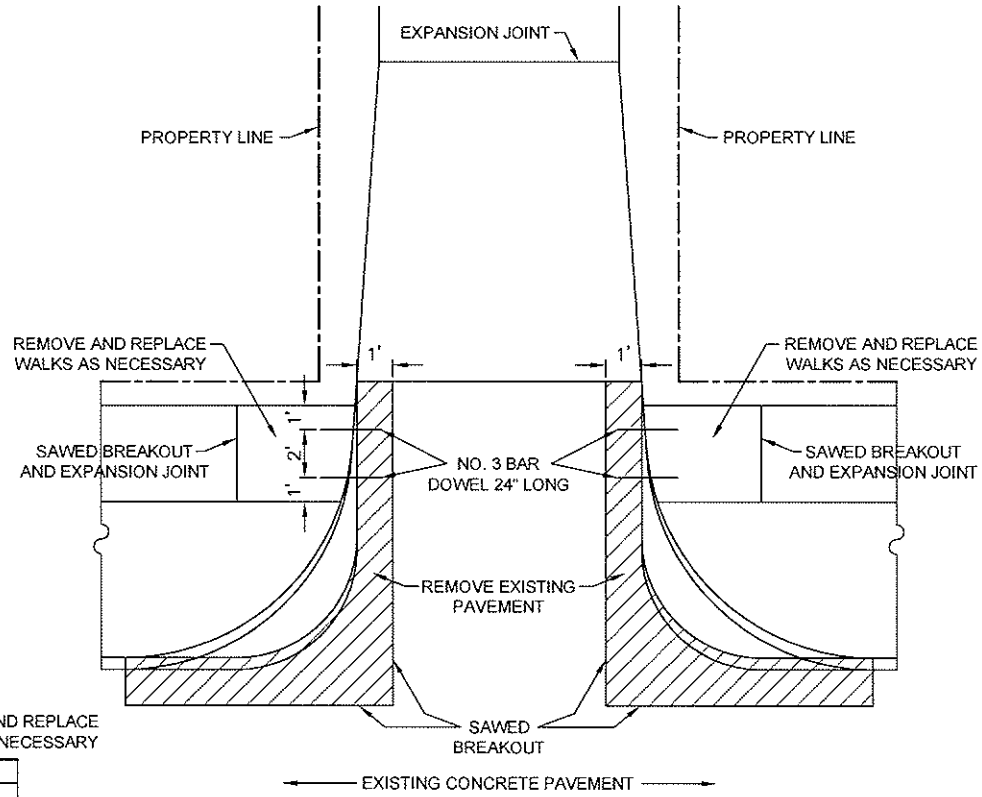

RETURN AT CONCRETE STREET

EXISTING ALLEY RETURN MODIFICATIONS

CITY OF SACHSE, TEXAS DEPARTMENT OF ENGINEERING	
STANDARD CONSTRUCTION DETAILS PAVING	
ALLEY & DRIVEWAY RETURNS	
APPROVED:	
DATE: NOVEMBER 2008	REVISED:

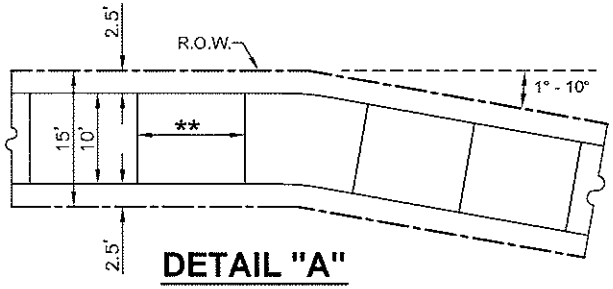

DETAIL "A"

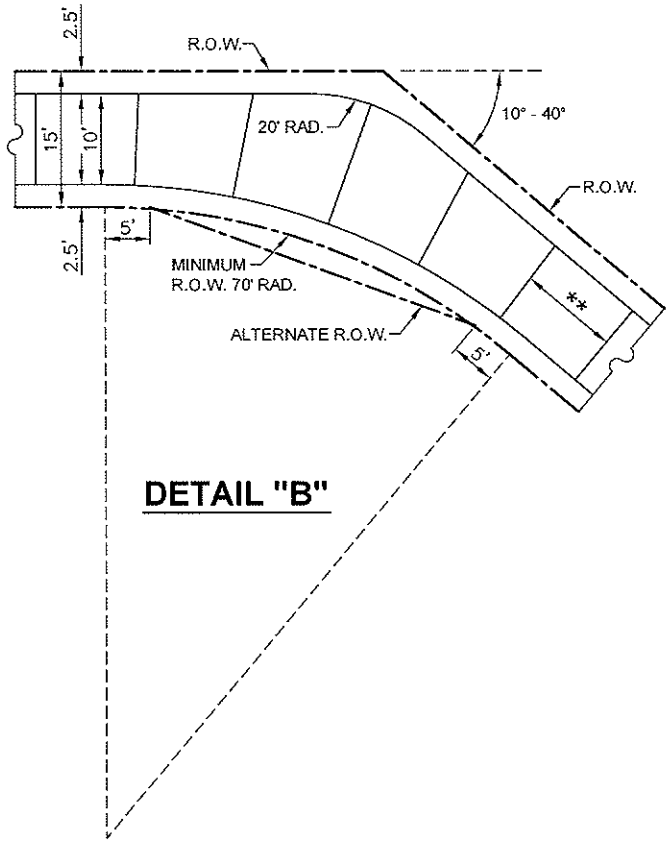

DETAIL "B"

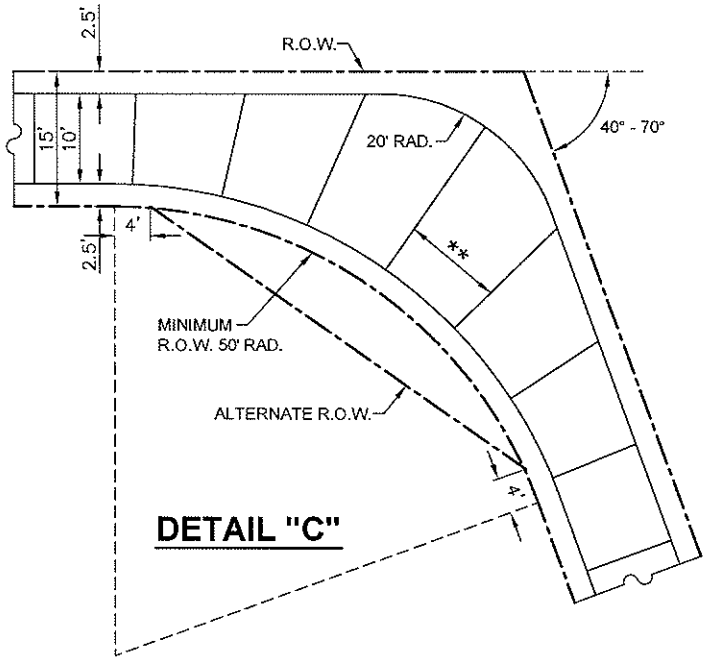

DETAIL "C"

** SAW CUT SPACING
WIDTH VARIES (SEE MAX.
SPACING CHART, SHT. 4)

CITY OF SACHSE, TEXAS DEPARTMENT OF ENGINEERING		
STANDARD CONSTRUCTION DETAILS PAVING		
ALLEY & DRIVEWAY RETURNS		
APPROVED:		
DATE: NOVEMBER 2008	REVISED:	Page 12

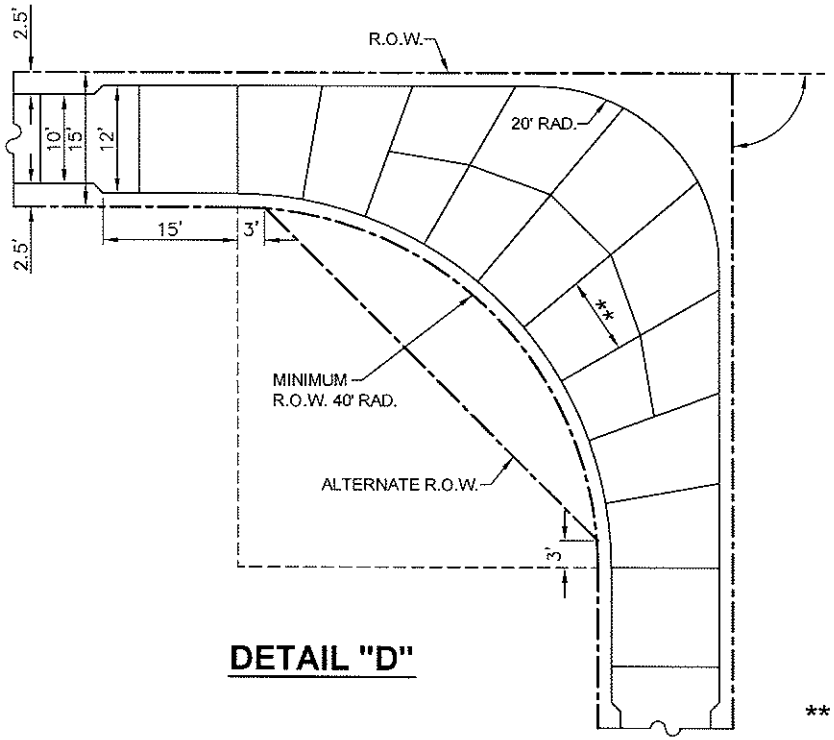

DETAIL "D"

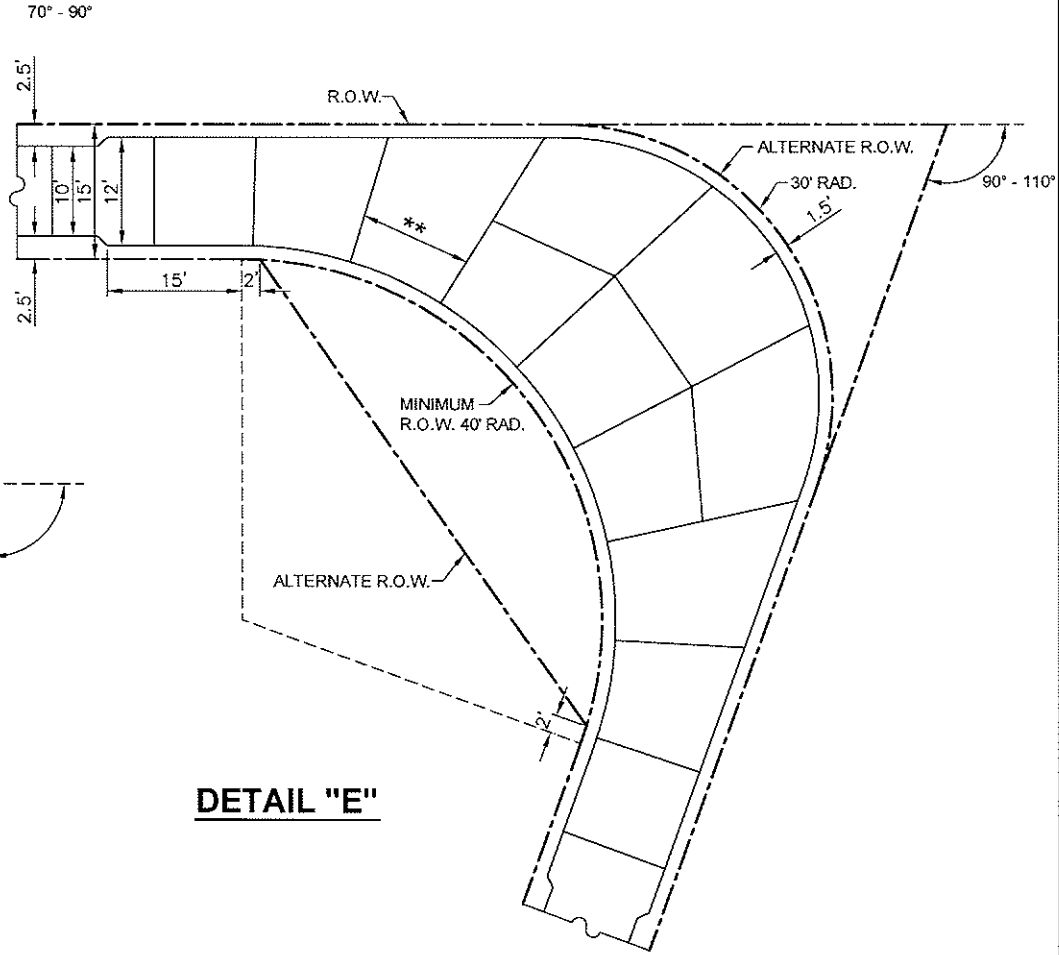

DETAIL "E"

** SAW CUT SPACING WIDTH VARIES (SEE MAX. SPACING CHART, SHT. 4)

CITY OF SACHSE, TEXAS DEPARTMENT OF ENGINEERING		
STANDARD CONSTRUCTION DETAILS PAVING		
ALLEY & DRIVEWAY RETURNS		
APPROVED:		
DATE: NOVEMBER 2008	REVISED:	Page 13

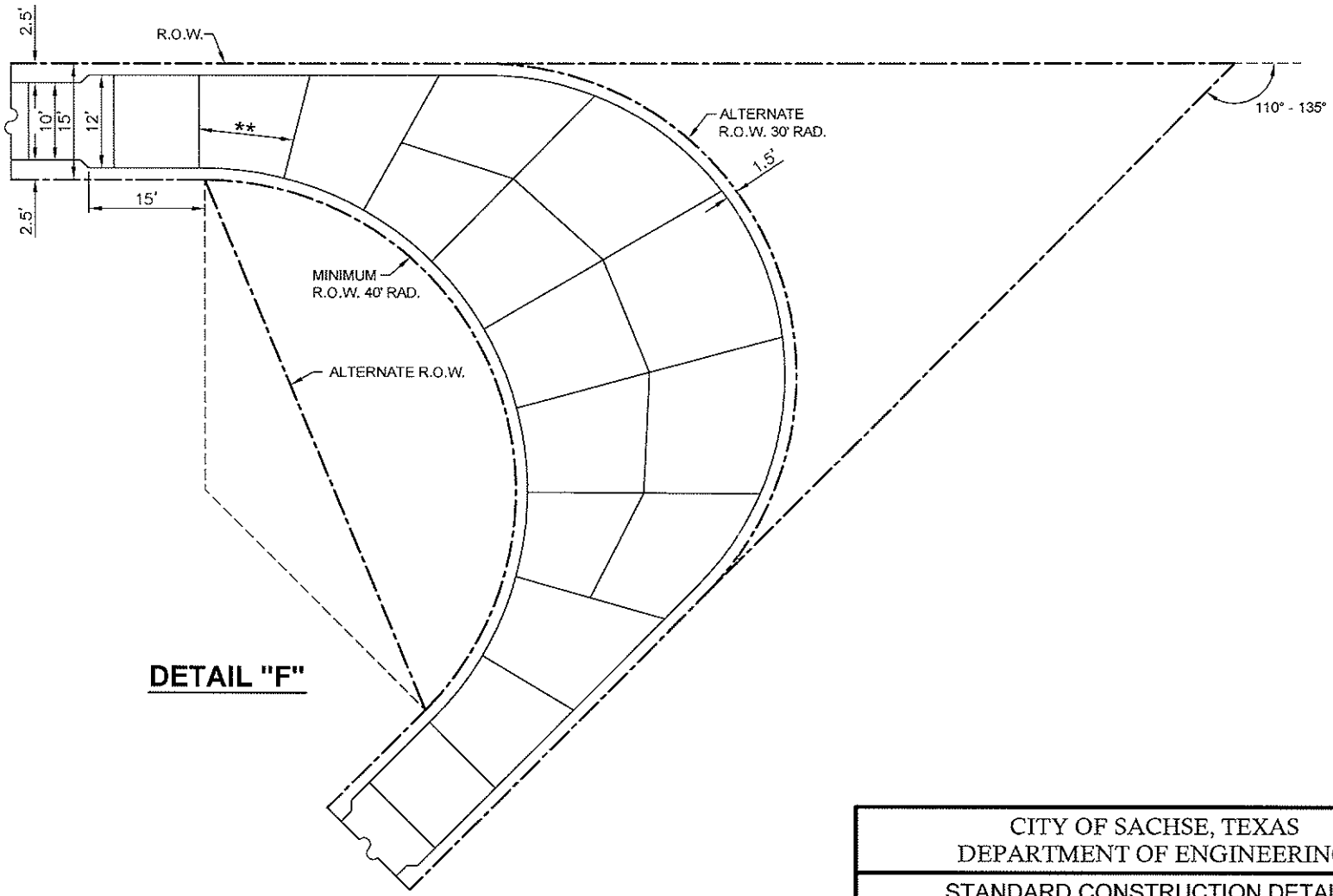

DETAIL "F"

** SAW CUT SPACING
WIDTH VARIES (SEE MAX.
SPACING CHART, SHT. 4)

CITY OF SACHSE, TEXAS DEPARTMENT OF ENGINEERING		
STANDARD CONSTRUCTION DETAILS PAVING		
ALLEY & DRIVEWAY RETURNS		
APPROVED:		
DATE: NOVEMBER 2008	REVISED:	Page 14

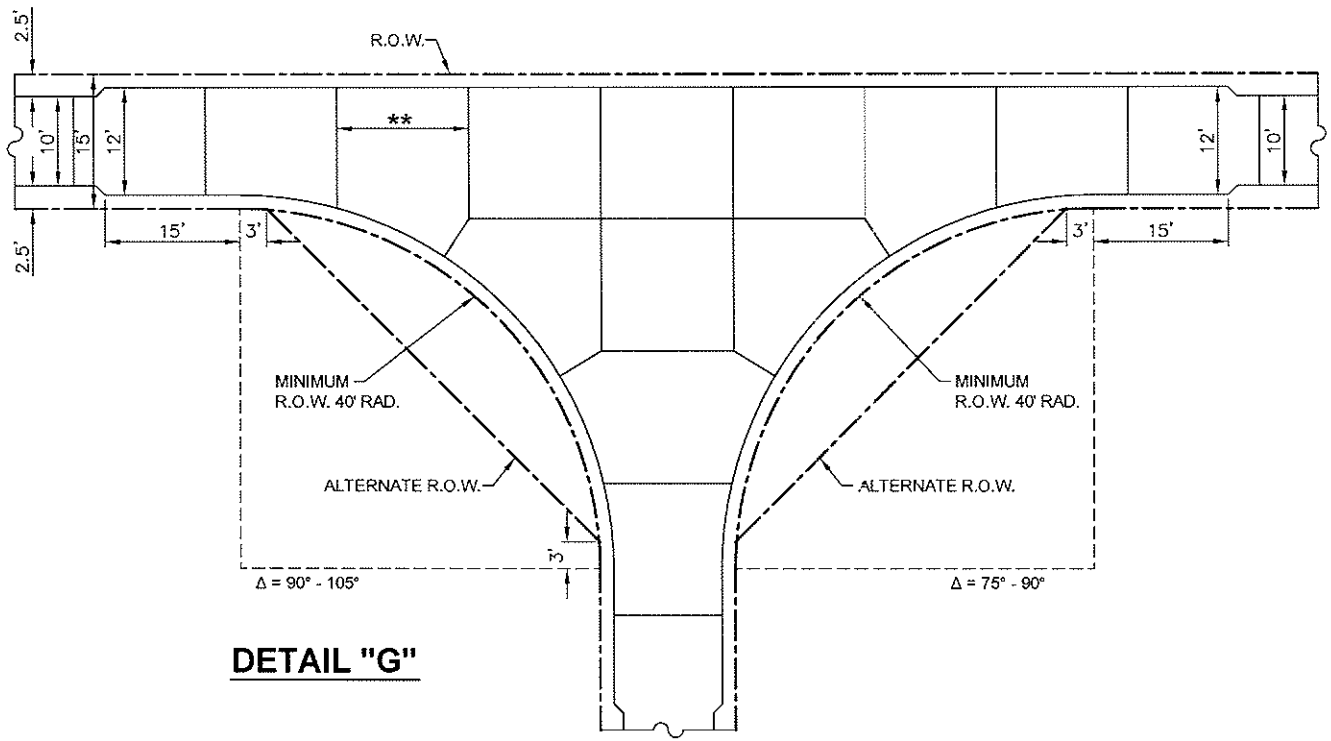

DETAIL "G"

** SAW CUT SPACING
WIDTH VARIES (SEE MAX.
SPACING CHART, SHT. 4)

CITY OF SACHSE, TEXAS DEPARTMENT OF ENGINEERING	
STANDARD CONSTRUCTION DETAILS PAVING	
ALLEY & DRIVEWAY RETURNS	
APPROVED:	
DATE: NOVEMBER 2008	REVISED:

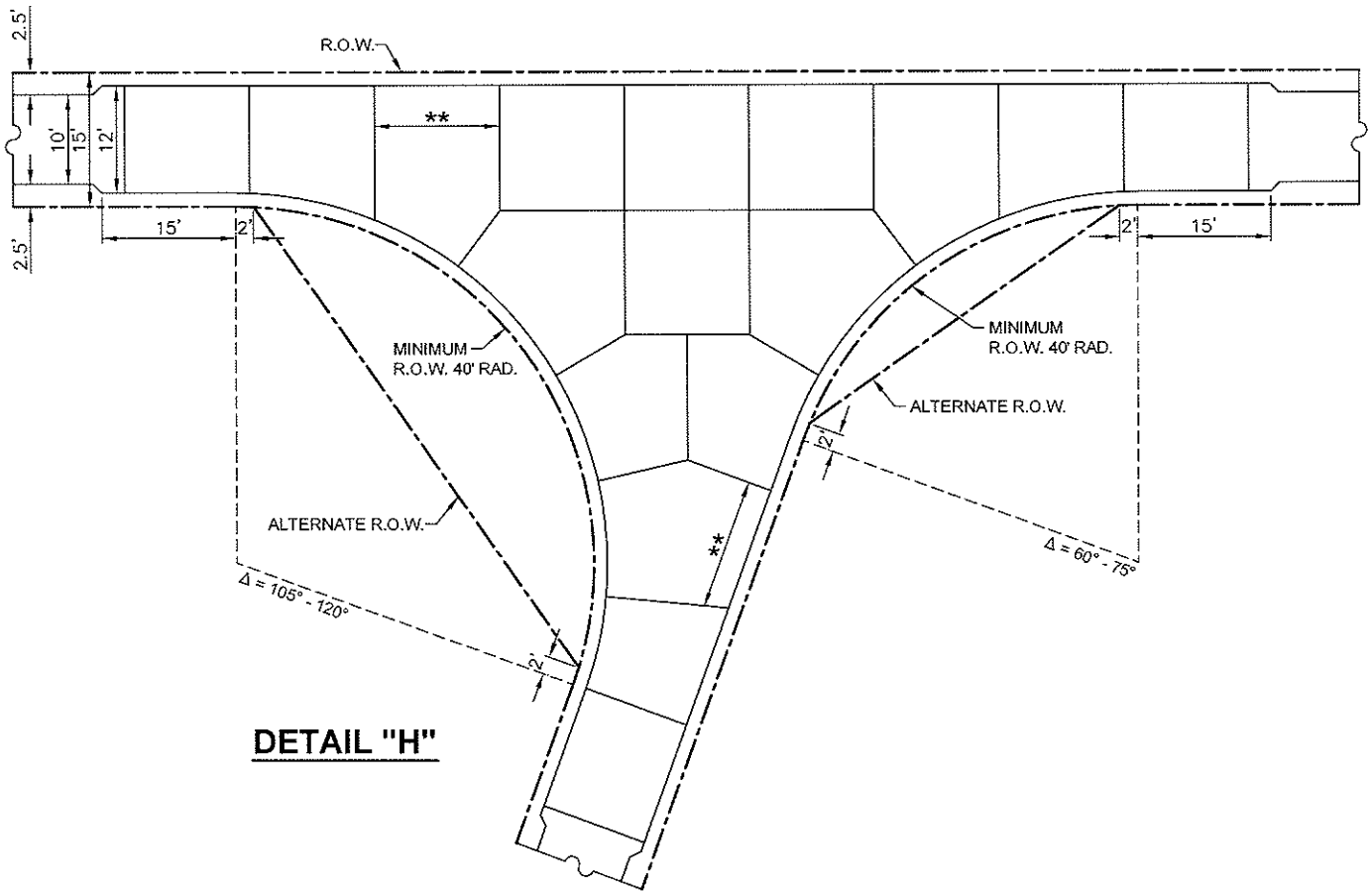

DETAIL "H"

** SAW CUT SPACING
WIDTH VARIES (SEE MAX.
SPACING CHART, SHT. 4)

CITY OF SACHSE, TEXAS DEPARTMENT OF ENGINEERING		
STANDARD CONSTRUCTION DETAILS PAVING		
ALLEY & DRIVEWAY RETURNS		
APPROVED:		
DATE: NOVEMBER 2008	REVISED:	Page 16

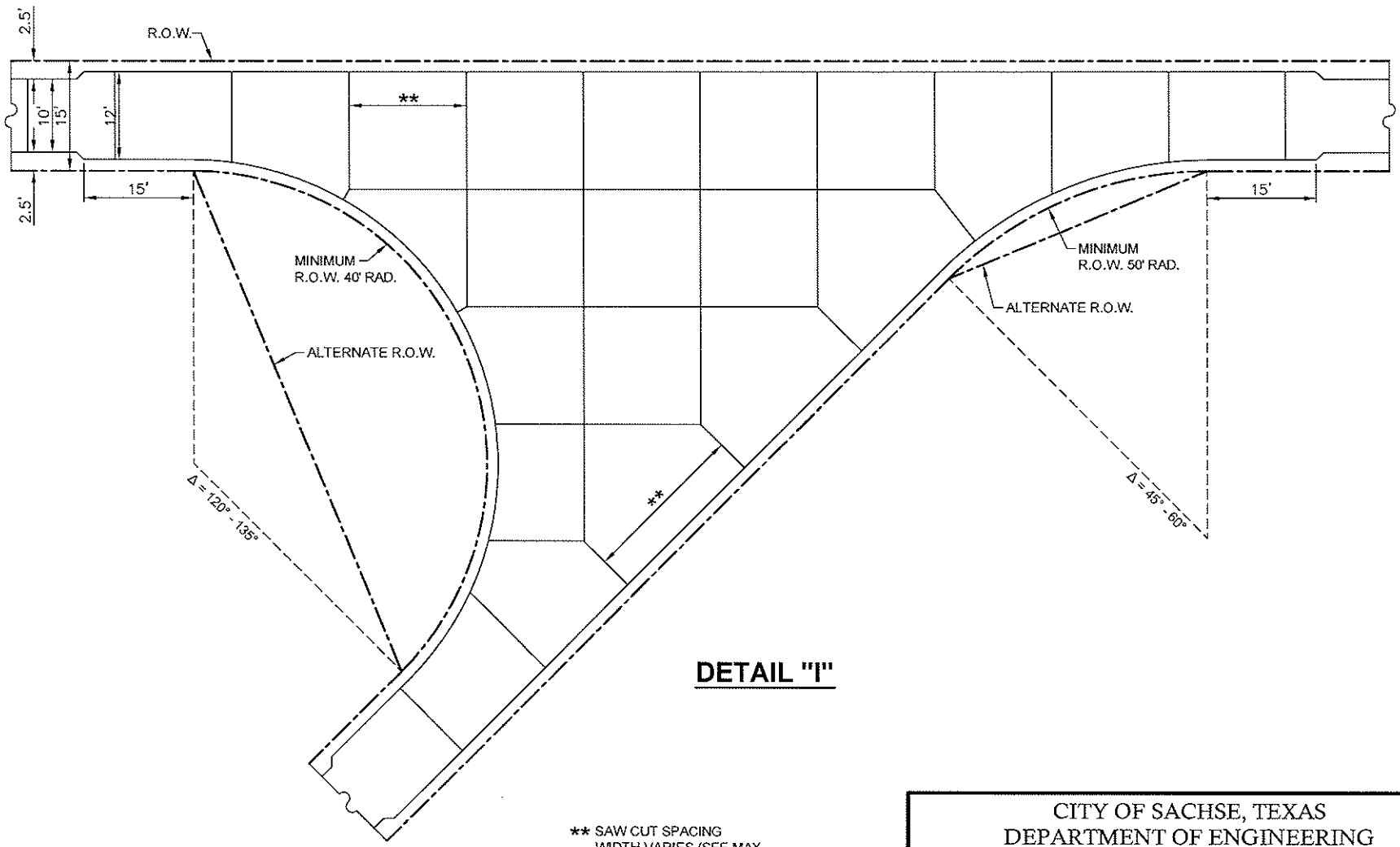

DETAIL "I"

** SAW CUT SPACING
WIDTH VARIES (SEE MAX.
SPACING CHART, SHT. 4)

CITY OF SACHSE, TEXAS DEPARTMENT OF ENGINEERING	
STANDARD CONSTRUCTION DETAILS PAVING	
ALLEY & DRIVEWAY RETURNS	
APPROVED:	
DATE: NOVEMBER 2008	REVISED:

SECTION 2-E
ASPHALT
PAVEMENT DETAIL

CITY OF SACHSE, TEXAS DEPARTMENT OF ENGINEERING		
STANDARD CONSTRUCTION DETAILS PAVING		
ASPHALT PAVEMENT DETAIL		
APPROVED:		
DATE: NOVEMBER 2008	REVISED:	Page 1

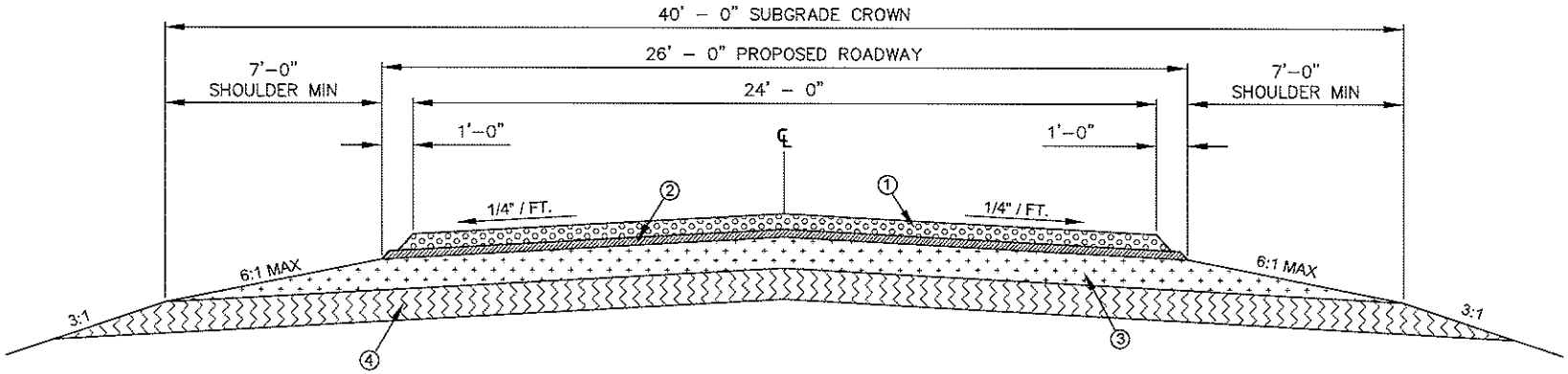

DRAINAGE: ROADWAY BAR DITCH DRAINAGE TO BE PROVIDED ALONG EACH SIDE OF THE SECTION.

PROPOSED TYPICAL SECTION FOR ROADWAYS

LEGEND:

①- 2" ASPHALT CONCRETE PAVEMENT, TYPE D (220#/S.Y.)

②- ASPHALT PRIME COAT (EST. 0.25 GAL/S.Y.)

③- ALTERNATE A - 2 COURSE - TOTAL 12" COMPACTED APPROVED FLEXIBLE BASE MATERIAL STABILIZED WITH 5% LIME BY WEIGHT

③- ALTERNATE B - 6" FOUNDATION COURSE CRUSHED AGGREGATE FLEXIBLE BASE. SHALL CONFORM TO THE FOLLOWING REQUIREMENTS: TYPE A GRADE 2

④- 6" LIME TREATED SUBGRADE COMPACTED TO 95% STANDARD PROCTOR DENSITY AT OPTIMUM MOISTURE. 6% LIME BY WEIGHT

NOTE: This section is to be considered only after specific approval is given by action of the City Council. Typical location for this roadway section would be for the reconstruction of existing City/County roadway sections, new street alignment to be constructed between existing roadway considered semi-temporary with the construction to be undertaken by the County Road and Bridge Crews or Contract work approved by the City.

CITY OF SACHSE, TEXAS DEPARTMENT OF ENGINEERING		
STANDARD CONSTRUCTION DETAILS PAVING		
ASPHALT PAVEMENT DETAIL		
APPROVED:		
DATE: NOVEMBER 2008	REVISED:	Page 2

SECTION 3
STORM WATER DETAILS

INDEX

CONTENTS	SECTION
MANHOLES	3-A
CURB INLETS	3-B
GRATE INLETS	3-C
CHANNEL SECTIONS	3-D

SECTION 3-A
MANHOLES

CITY OF SACHSE, TEXAS DEPARTMENT OF ENGINEERING		
STANDARD CONSTRUCTION DETAILS STORM WATER		
MANHOLES		
APPROVED:		
DATE: NOVEMBER 2008	REVISED:	Page 1

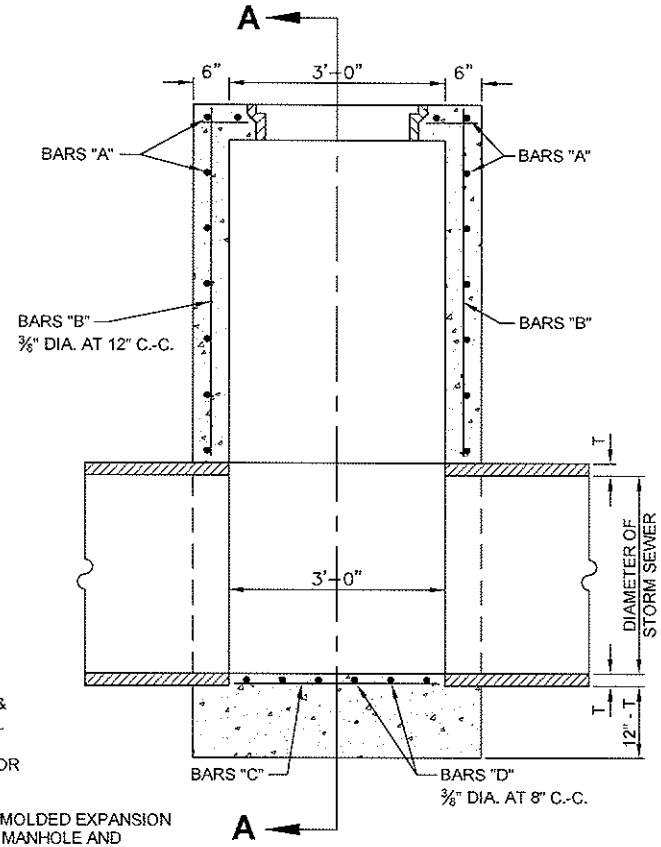

ELEVATION

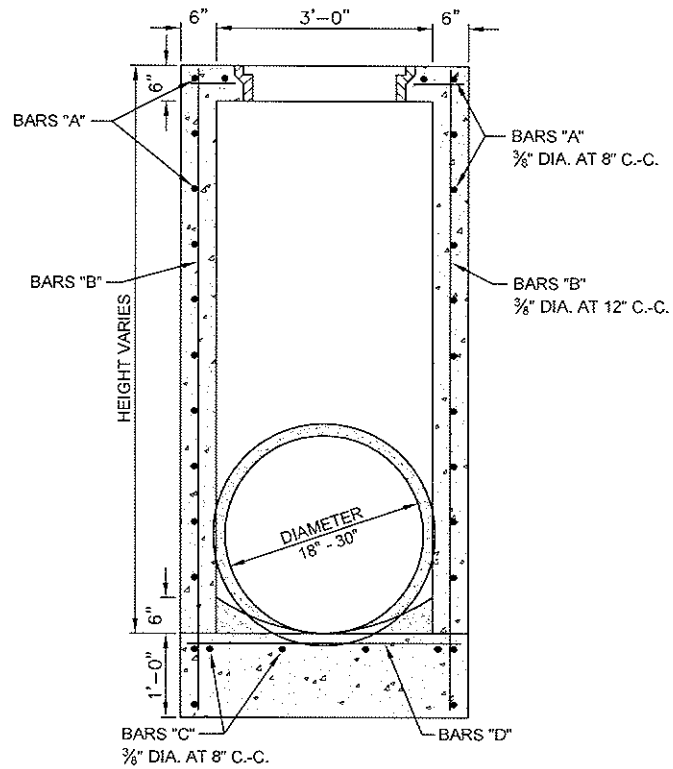

SECTION A-A

TYPE "A" STORM SEWER MANHOLE

(FOR PIPE 18" TO 30" IN DIAMETER)

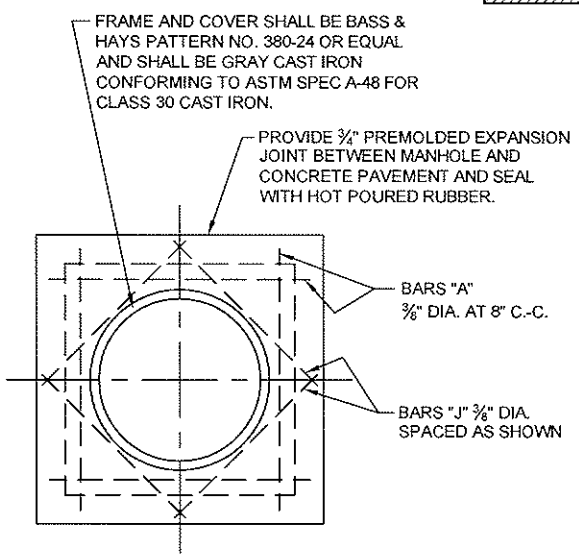

TOP PLAN TYPE A & TYPE B STORM SEWER MANHOLE

NOTE: MAXIMUM PIPE SIZE TO BE USED 78"

NOTE: IF ROCK IS ENCOUNTERED IN TRENCH BOTTOM, OVER EXCAVATE TRENCH A MINIMUM OF 8" AND BED PIPE IN GRAVEL OR CRUSHED STONE. IF JETTED SAND IS USED IN BACKFILL ABOVE SPRING LINE OF CORRUGATED METAL PIPE THE SAND SHALL BE COMPLETELY DRAINED AND TESTED FOR 90% DENSITY PRIOR TO ANY BACKFILL OVER PIPE.

CITY OF SACHSE, TEXAS DEPARTMENT OF ENGINEERING		
STANDARD CONSTRUCTION DETAILS STORM WATER		
MANHOLES		
APPROVED:		
DATE: NOVEMBER 2008	REVISED:	Page 2

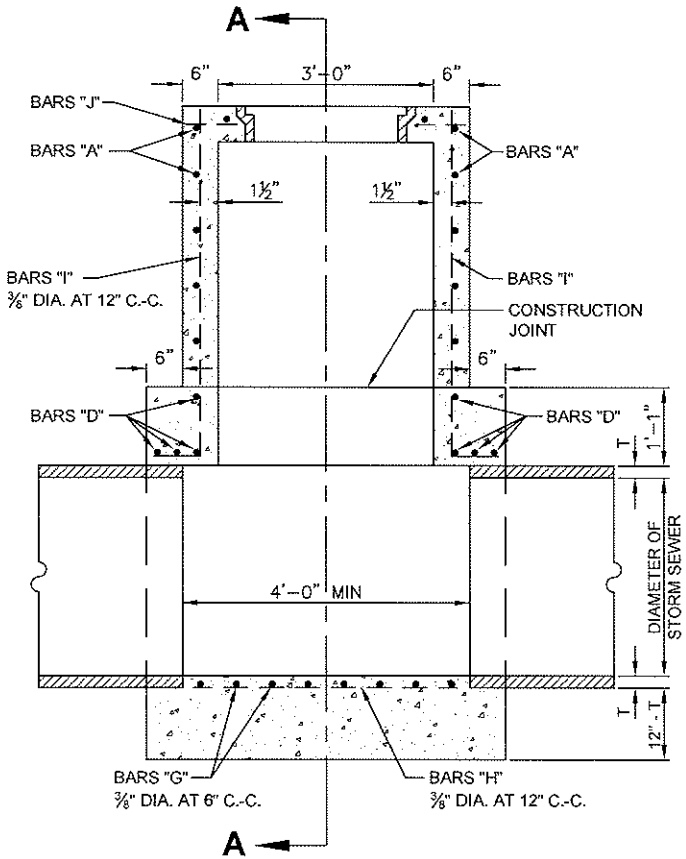

ELEVATION

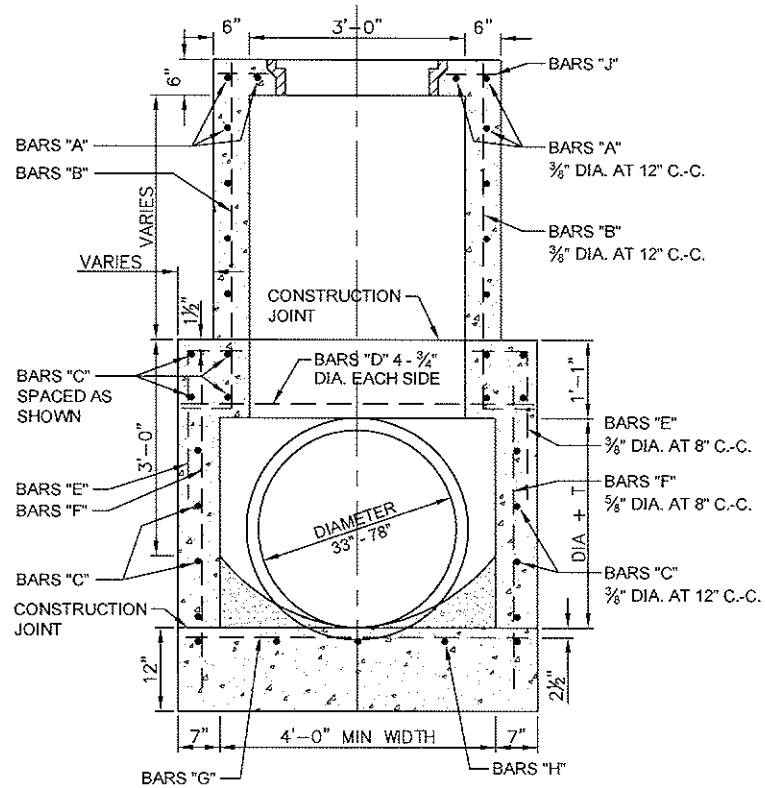

SECTION A-A

TYPE "B" STORM SEWER MANHOLE

(FOR PIPE 33" TO 78" IN DIAMETER)

CITY OF SACHSE, TEXAS DEPARTMENT OF ENGINEERING		
STANDARD CONSTRUCTION DETAILS STORM WATER		
MANHOLES		
APPROVED:		
DATE: NOVEMBER 2008	REVISED:	Page 3

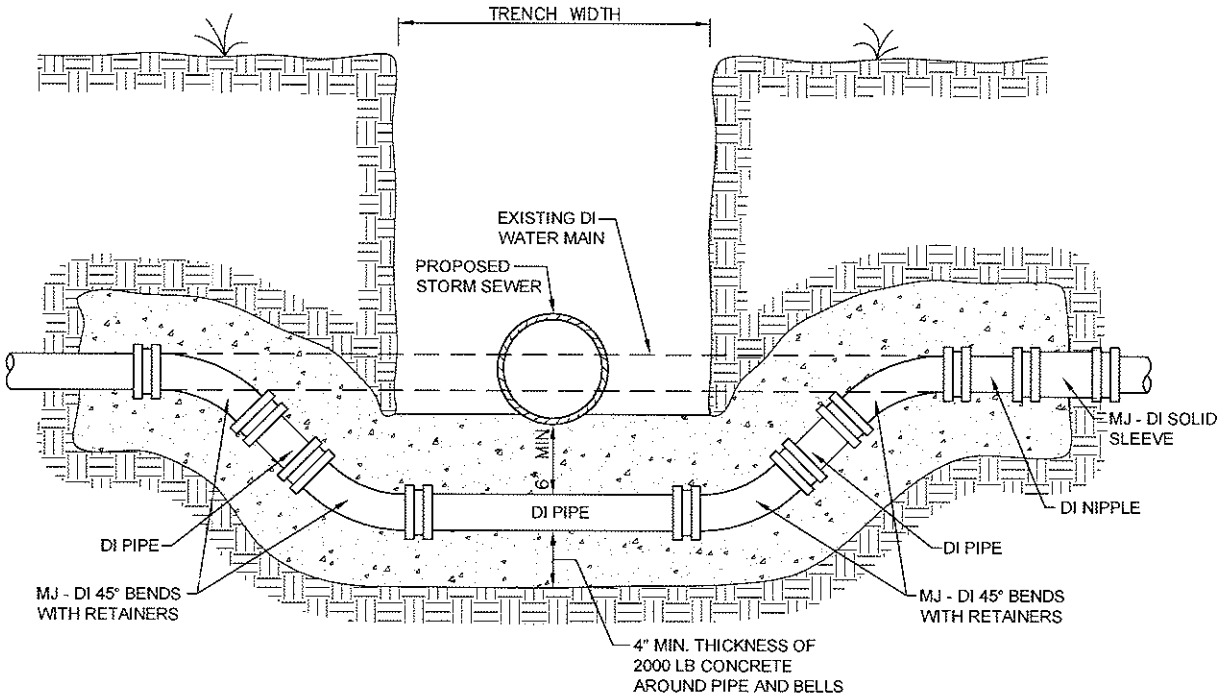

DETAIL FOR WATER MAIN LOWERING

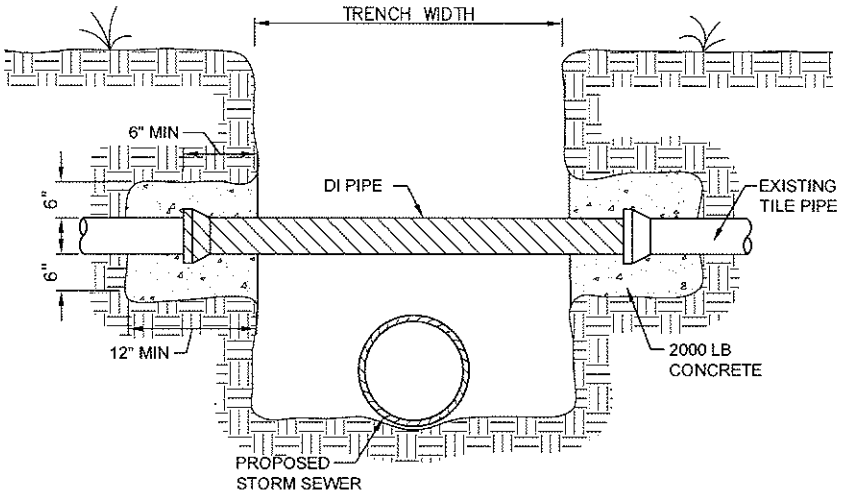

DETAIL OF UTILITY SUPPORT

CITY OF SACHSE, TEXAS DEPARTMENT OF ENGINEERING		
STANDARD CONSTRUCTION DETAILS STORM WATER		
MANHOLES		
APPROVED:		
DATE: NOVEMBER 2008	REVISED:	Page 4

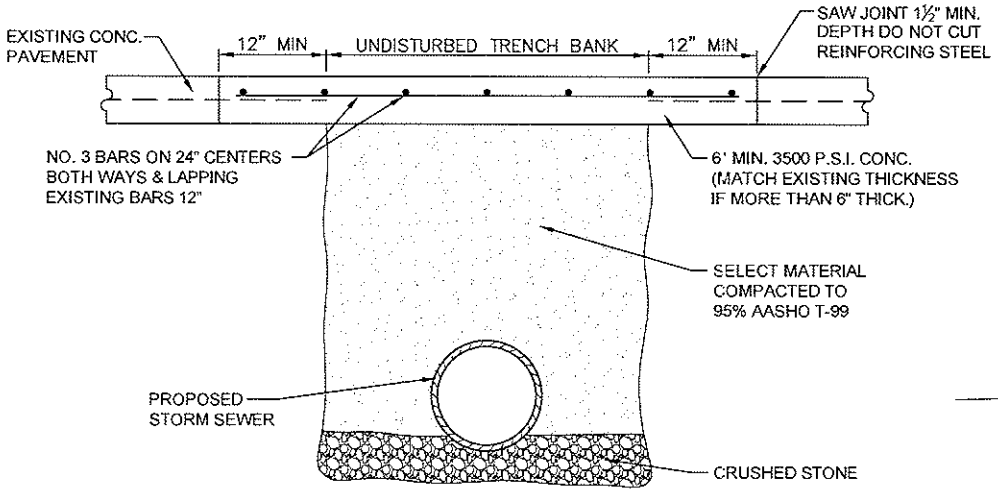

CONCRETE STREET OR DRIVEWAY REPAIR

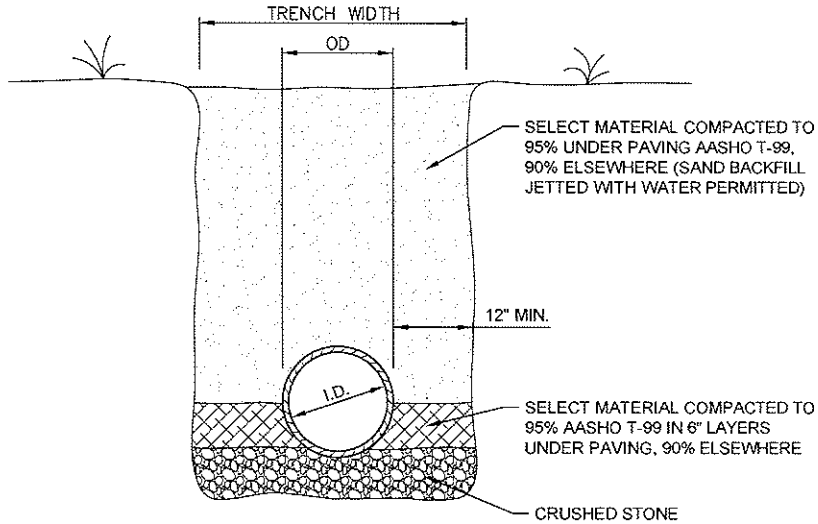

CLASS B BEDDING

STORM SEWER PIPE BEDDING DETAIL

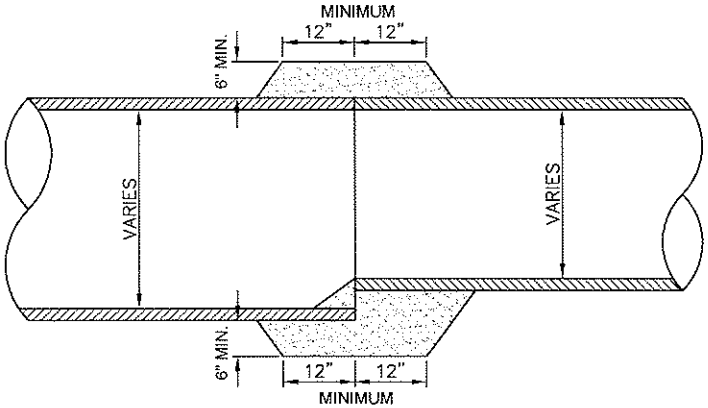

DETAIL OF CONCRETE COLLAR FOR PIPE CONNECTIONS

CITY OF SACHSE, TEXAS DEPARTMENT OF ENGINEERING		
STANDARD CONSTRUCTION DETAILS STORM WATER		
MANHOLES		
APPROVED:		
DATE: NOVEMBER 2008	REVISED:	Page 5

SECTION 3-B
CURB INLETS

CITY OF SACHSE, TEXAS DEPARTMENT OF ENGINEERING		
STANDARD CONSTRUCTION DETAILS STORM WATER		
CURB INLETS		
APPROVED:		
DATE: NOVEMBER 2008	REVISED:	Page 1

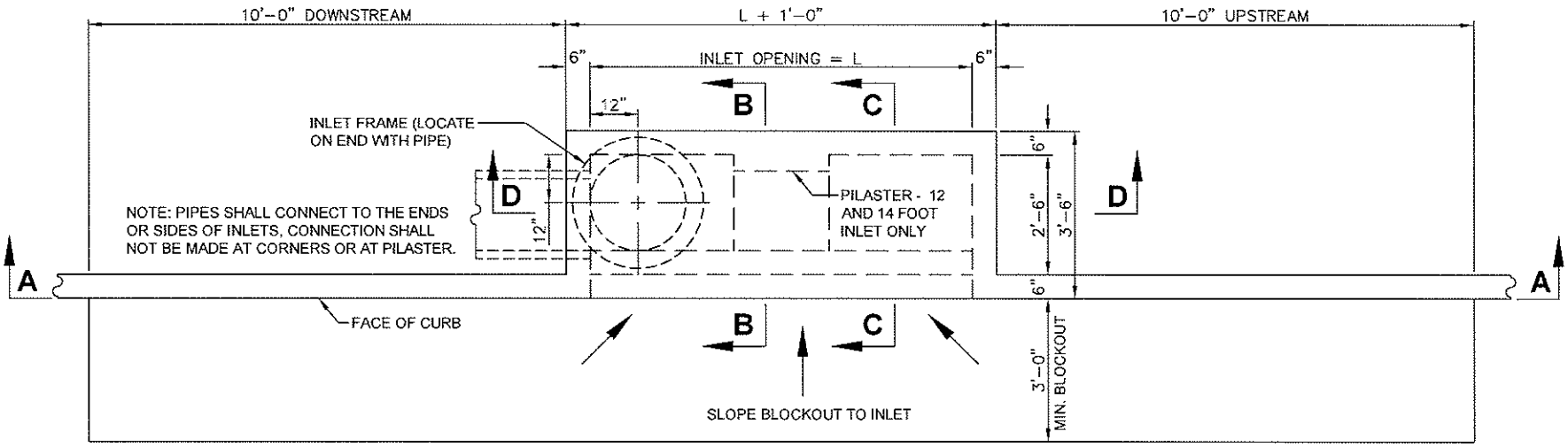

PLAN - STANDARD INLET

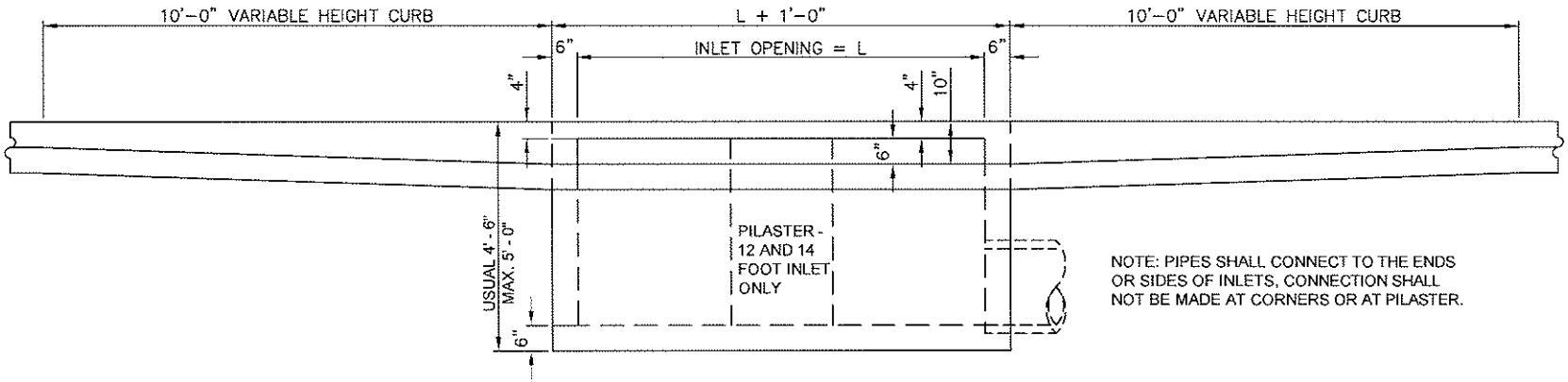

SECTION A-A FOR STANDARD INLETS

CITY OF SACHSE, TEXAS DEPARTMENT OF ENGINEERING		
STANDARD CONSTRUCTION DETAILS STORM WATER		
CURB INLETS		
APPROVED:		
DATE: NOVEMBER 2008	REVISED:	Page 2

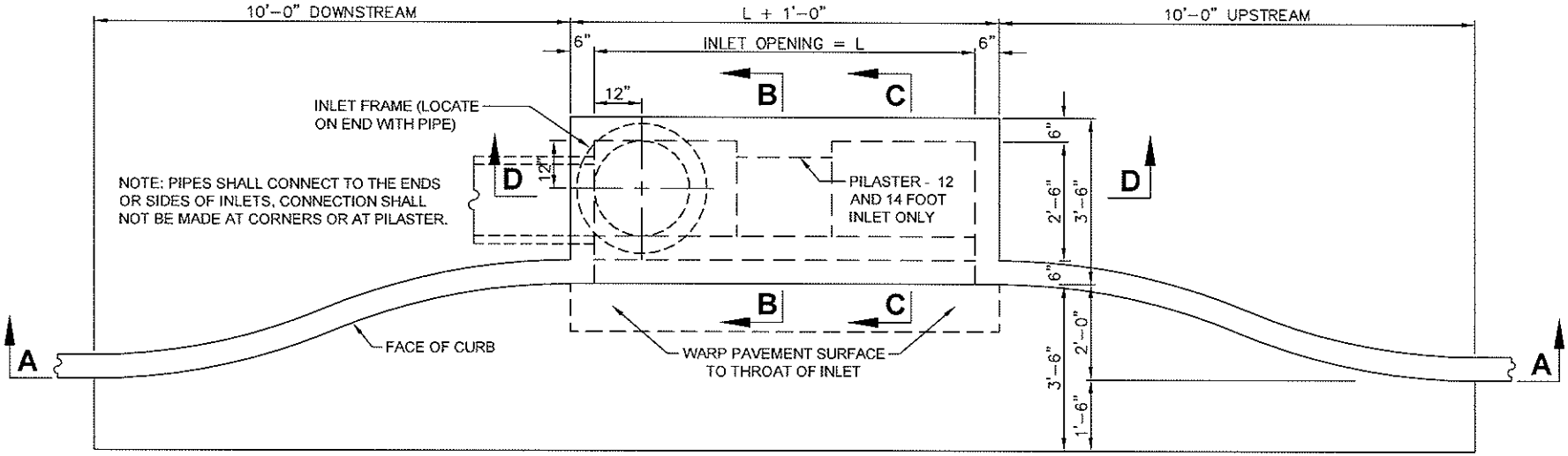

PLAN - STANDARD INLET

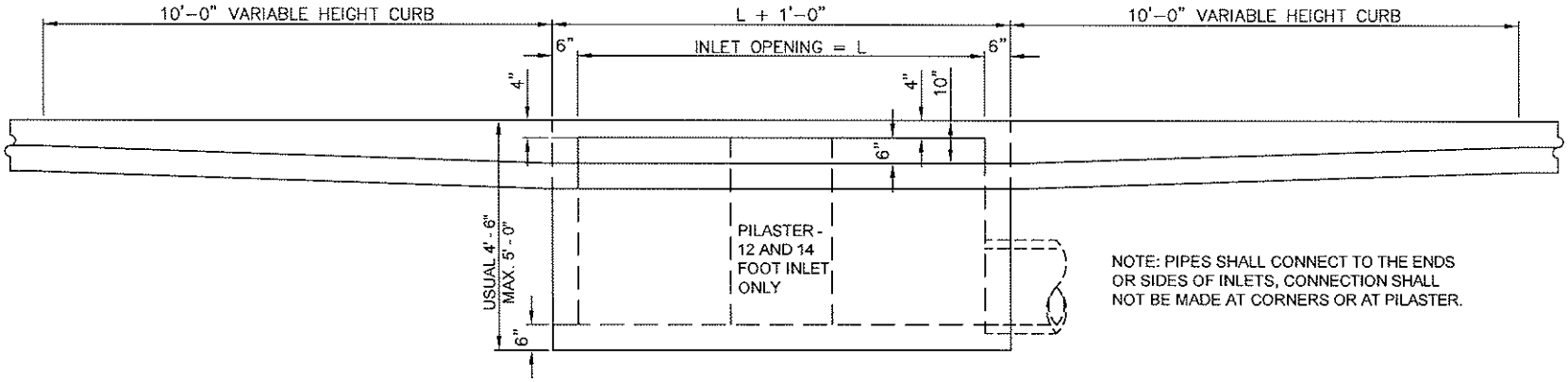

SECTION A-A FOR STANDARD INLETS

CITY OF SACHSE, TEXAS DEPARTMENT OF ENGINEERING		
STANDARD CONSTRUCTION DETAILS STORM WATER		
CURB INLETS		
APPROVED:		
DATE: NOVEMBER 2008	REVISED:	Page 3

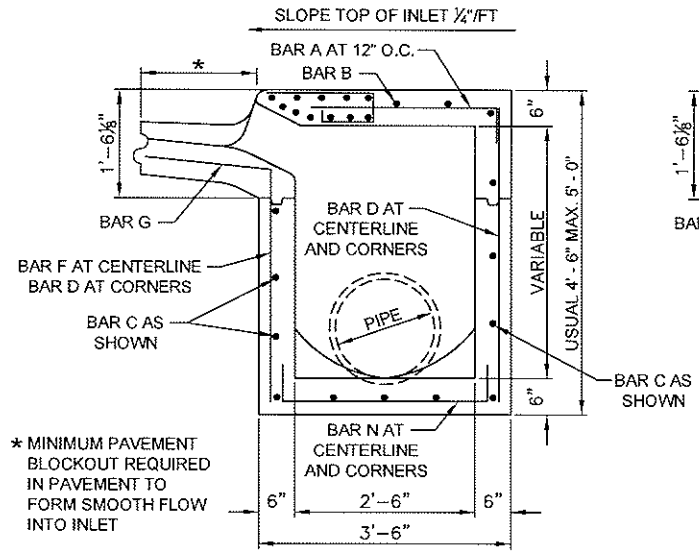

SECTION B-B

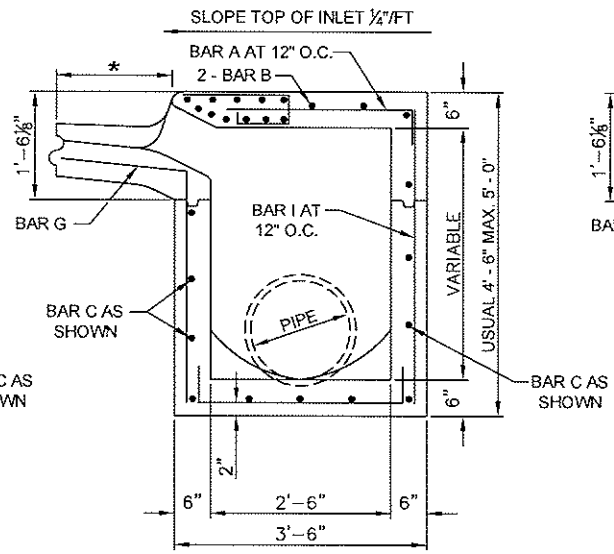

SECTION C-C

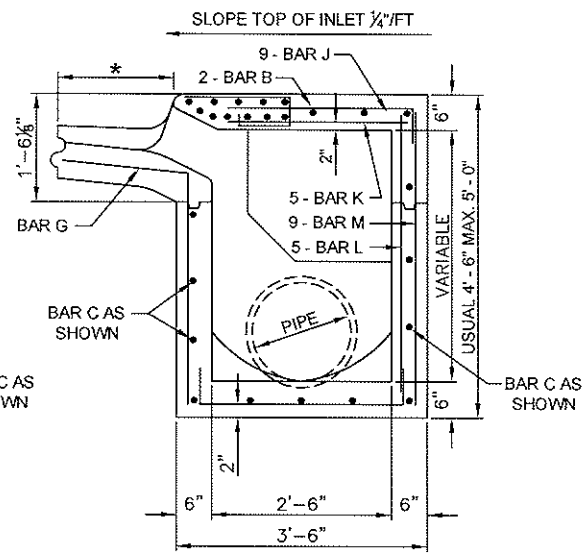

SECTION B-B FOR 12' & 14' ONLY

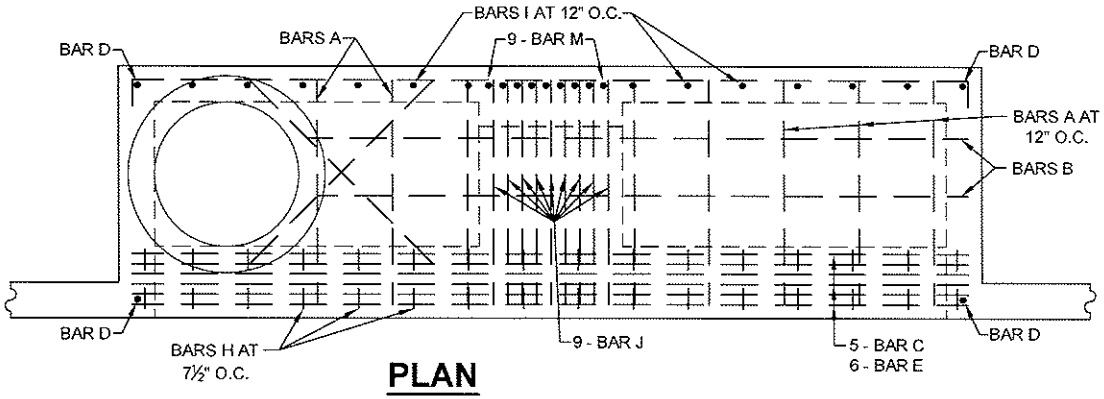

PLAN

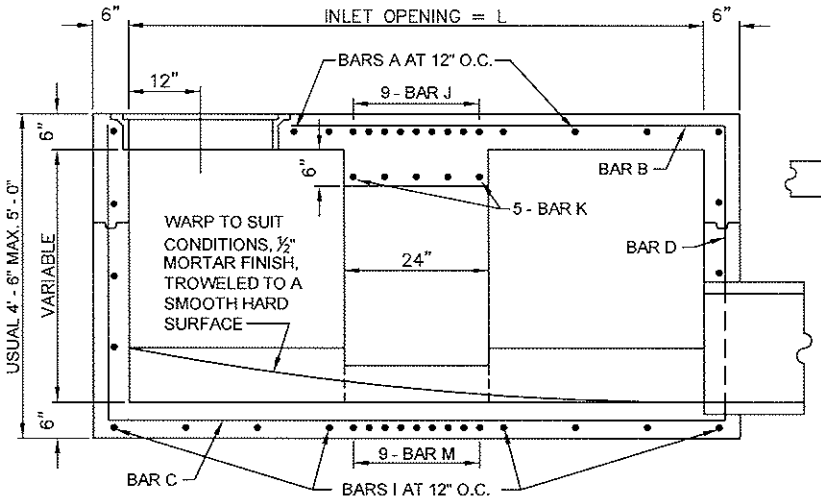

SECTION D-D FOR 12' & 14' ONLY

CITY OF SACHSE, TEXAS
DEPARTMENT OF ENGINEERING

STANDARD CONSTRUCTION DETAILS
STORM WATER

CURB INLETS

APPROVED:

DATE: NOVEMBER 2008 | REVISED: | Page 4

INLET LENGTH	BAR TYPE	BAR DIA (⅛ IN)	NO. REQ'D	BAR DIMENSIONS		
				A	B	C
4	A	3	6	3'-2"	0'-3"	-
	B	3	1	2'-10"	-	-
	C	4	15	4'-8"	0'-6"	-
	D	4	5	4'-8"	-	-
	F	4	1	3'-2"	-	-
	G	3	5	2'-0"	1'-3"	-
	H	3	3	*	*	*
	N	3	3	3'-2"	3'-2"	3'-2"
6	A	3	9	3'-2"	0'-3"	-
	B	3	1	4'-10"	-	-
	C	4	15	6'-8"	0'-6"	-
	D	4	5	4'-8"	-	-
	F	4	1	3'-2"	-	-
	G	3	5	2'-0"	1'-3"	-
	H	3	3	*	*	*
	N	3	3	3'-2"	3'-2"	3'-2"
8	A	3	12	3'-2"	0'-3"	-
	B	3	1	6'-10"	-	-
	C	4	15	8'-8"	0'-6"	-
	D	4	5	4'-8"	-	-
	F	4	1	3'-2"	-	-
	G	3	5	2'-0"	1'-3"	-
	H	3	4	*	*	*
	N	3	3	3'-2"	3'-2"	3'-2"
10	A	3	10	3'-2"	0'-3"	-
	B	3	2	8'-10"	-	-
	C	4	16	10'-8"	0'-6"	-
	D	4	4	4'-8"	-	-
	E	5	6	10'-8"	-	-
	G	3	5	2'-0"	1'-3"	-
	H	3	15	*	*	*
	I	4	6	4'-8"	3'-2"	3'-2"
	L	4	5	4'-3"	-	-
12	A	3	12	3'-2"	0'-3"	-
	B	3	2	10'-10"	-	-
	C	4	16	12'-8"	0'-6"	-
	D	4	4	4'-8"	-	-
	E	5	6	12'-8"	-	-
	G	3	5	2'-0"	1'-3"	-
	H	3	18	*	*	*
	I	4	10	4'-8"	3'-2"	3'-2"
	J	5	9	3'-2"	1'-3"	-
	K	4	5	2'-3"	-	-
	L	4	5	4'-3"	-	-
	M	5	9	4'-3"	3'-2"	3'-9"
14	A	3	14	3'-2"	0'-3"	-
	B	3	2	10'-10"	-	-
	C	4	18	14'-8"	0'-6"	-
	D	4	4	4'-8"	-	-
	E	5	6	14'-8"	-	-
	G	3	5	2'-0"	1'-3"	-
	H	3	21	*	*	*
	I	4	12	4'-8"	3'-2"	3'-2"
	J	5	9	3'-2"	1'-3"	-
	K	4	5	2'-3"	-	-
	L	4	5	4'-3"	-	-
	M	5	9	4'-3"	3'-2"	3'-9"

REINFORCING STEEL SCHEDULE

DIMENSIONS SHOWN ARE FOR MAXIMUM SIZE INLETS

* SEE DIAGRAM FOR DIMENSIONS

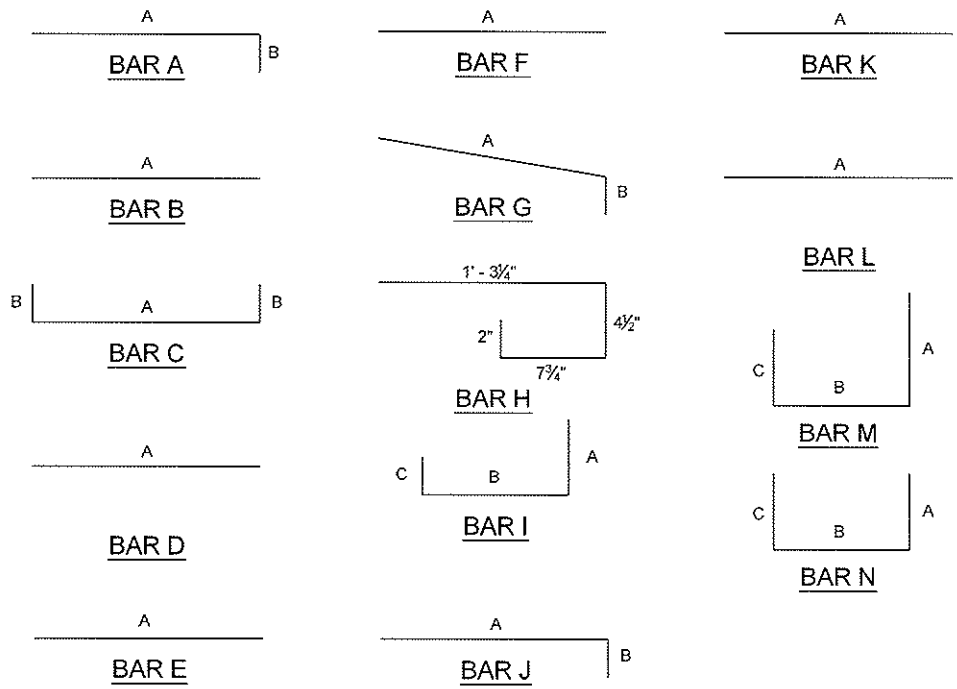

BAR DIAGRAMS

CITY OF SACHSE, TEXAS
DEPARTMENT OF ENGINEERING

STANDARD CONSTRUCTION DETAILS
STORM WATER

CURB INLETS

APPROVED:

DATE: NOVEMBER 2008 | REVISED: | Page 5

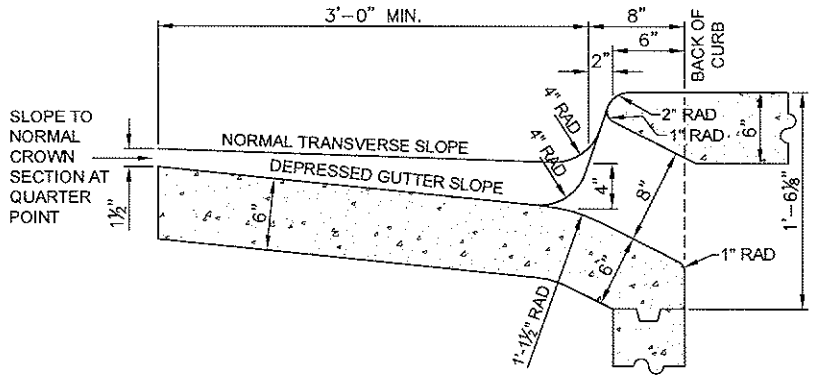

INLET THROAT DETAIL MINIMUM SECTION

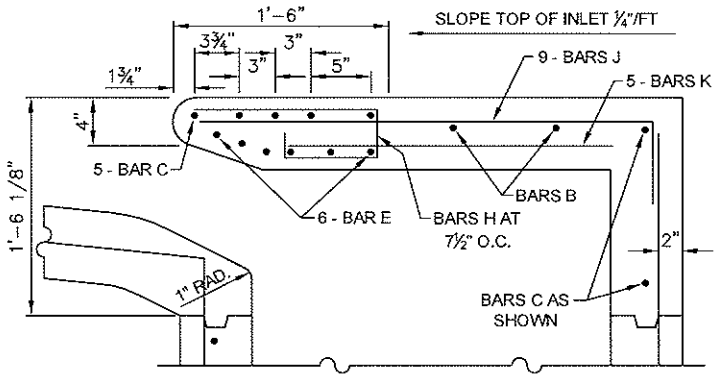

SECTION B-B FOR 12' & 14' ONLY

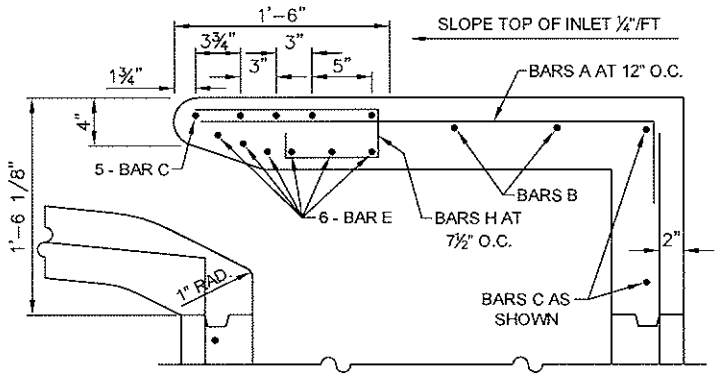

SECTION C-C FOR 12' & 14' ONLY

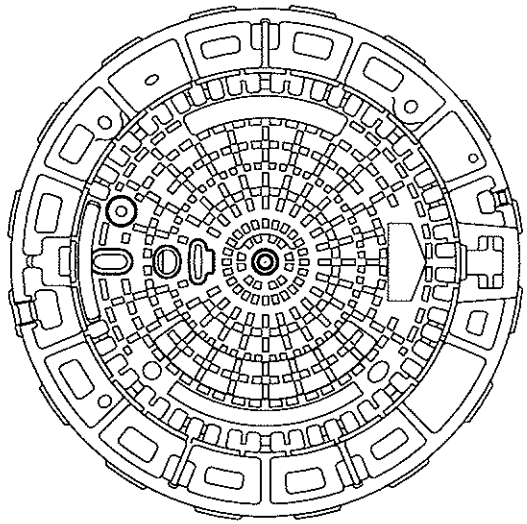

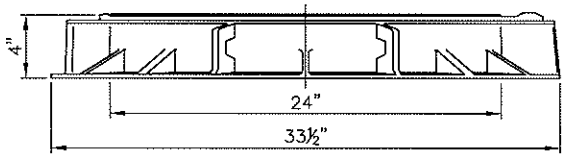

NOTES:

1. Manhole cover and frame shall be called PAMREX or approved equal. Cover and frame shall be manufactured from Ductile Iron.
2. Covers shall be hinged and incorporate a 90 degree blocking system to prevent accidental closure. Covers shall be one man operable using standard tools and shall be capable of withstanding a test load of 80,000 lbs.
3. Frames shall be circular, incorporate a seating ring and a fitted plug in the hinge housing, and be available in a 24 inch clear opening. The frame depth shall not exceed 4 inches, and the flange shall incorporate bedding slots, bolt holes, and lifting eyes.
4. All components shall be black coated.

Frame weight: 73 lbs.
Cover weight: 122 lbs.
Total weight: 195 lbs.

INLET FRAME AND COVER

CITY OF SACHSE, TEXAS DEPARTMENT OF ENGINEERING		
STANDARD CONSTRUCTION DETAILS STORM WATER		
CURB INLETS		
APPROVED:		
DATE: NOVEMBER 2008	REVISED:	Page 6

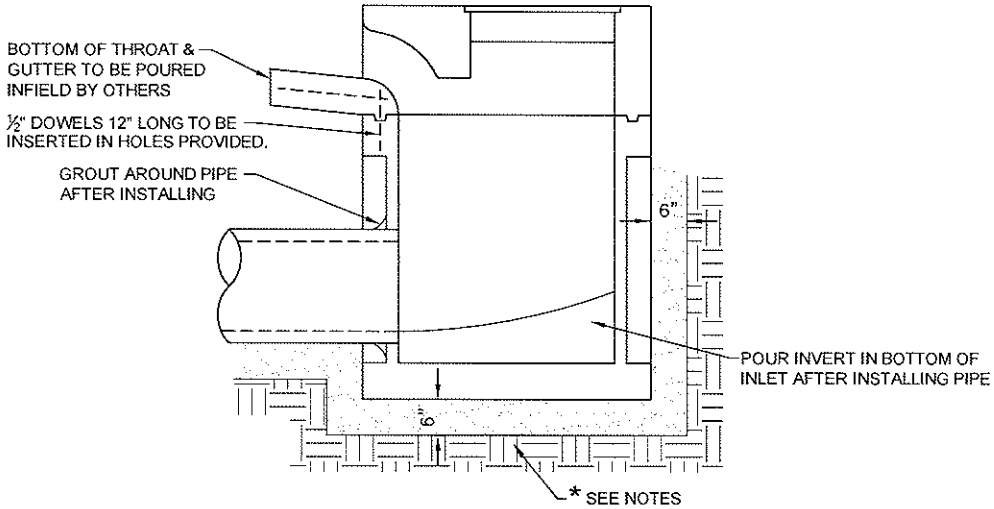

INSTALLATION DRAWING FOR PRECAST 5' & 10' CURB INLETS

Notes:

1 The floor of the excavation must provide a firm, level bed for the base section to rest upon.

2 A minimum of 6" of 1" diameter (maximum) rock or gravel shall be used to prepare the bedding to final grade or in lieu of this that at least 6" of 2 sack cement stabilized sand be used to prepare the bedding to grade. Cement stabilized sand to be allowed to set by keeping hole pumped dry.

3 After casting has been installed on the proper bedding, the backfill material, which is free flowing and clear of rocks in excess of 4" diameter and other lumps which would prohibit proper compaction, shall be commenced in lifts of no more than 18". The material used for backfill should be of a type suitable to obtain the density requirements for the specific job.

CITY OF SACHSE, TEXAS DEPARTMENT OF ENGINEERING		
STANDARD CONSTRUCTION DETAILS STORM WATER		
CURB INLETS		
APPROVED:		
DATE: NOVEMBER 2008	REVISED:	Page 7

SECTION 3-C
GRATE INLETS

CITY OF SACHSE, TEXAS DEPARTMENT OF ENGINEERING		
STANDARD CONSTRUCTION DETAILS STORM WATER		
GRATE INLETS		
APPROVED:		
DATE: NOVEMBER 2008	REVISED:	Page 1

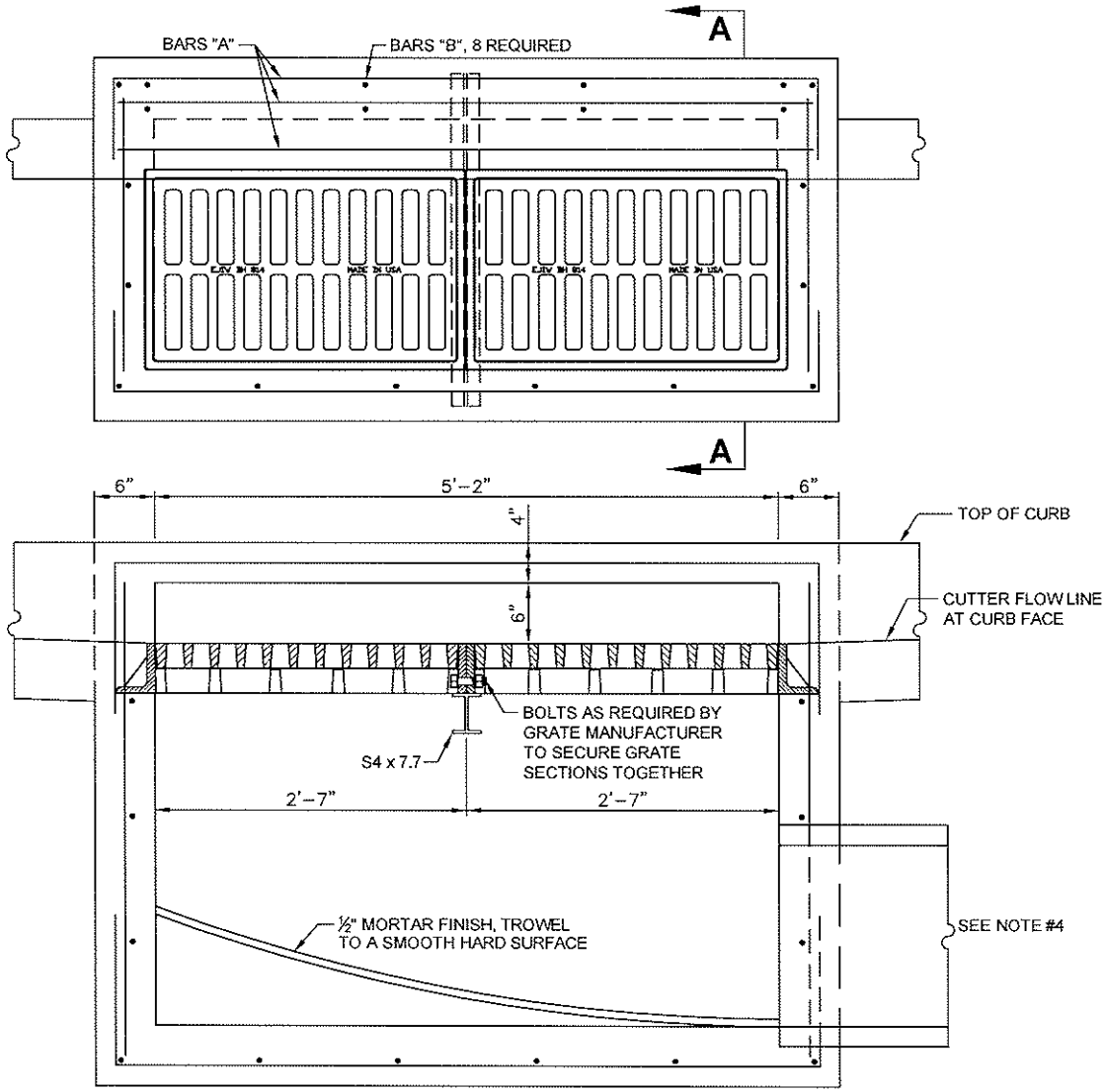

TWO GRATE INLET

NOTES:

1. COMBINATION INLETS MAY BE USED IN COMBINATION WITH CURB LINE INLETS IN ALL ALLEYS WHERE INLETS ARE REQUIRED IF APPROVED BY CITY ENGINEER.
2. ALL LAPS AND EXTENSIONS OF REINFORCING BARS SHALL BE 36 BAR DIAMETERS UNLESS NOTED OTHERWISE.
3. TACK WELD GRATES IN PLACE.
4. PIPE MAY BE PLACED IN ANY WALL, BUT SHALL NOT ENTER ANY CORNER.

CITY OF SACHSE, TEXAS DEPARTMENT OF ENGINEERING		
STANDARD CONSTRUCTION DETAILS STORM WATER		
GRATE INLETS		
APPROVED:		
DATE: NOVEMBER 2008	REVISED:	Page 2

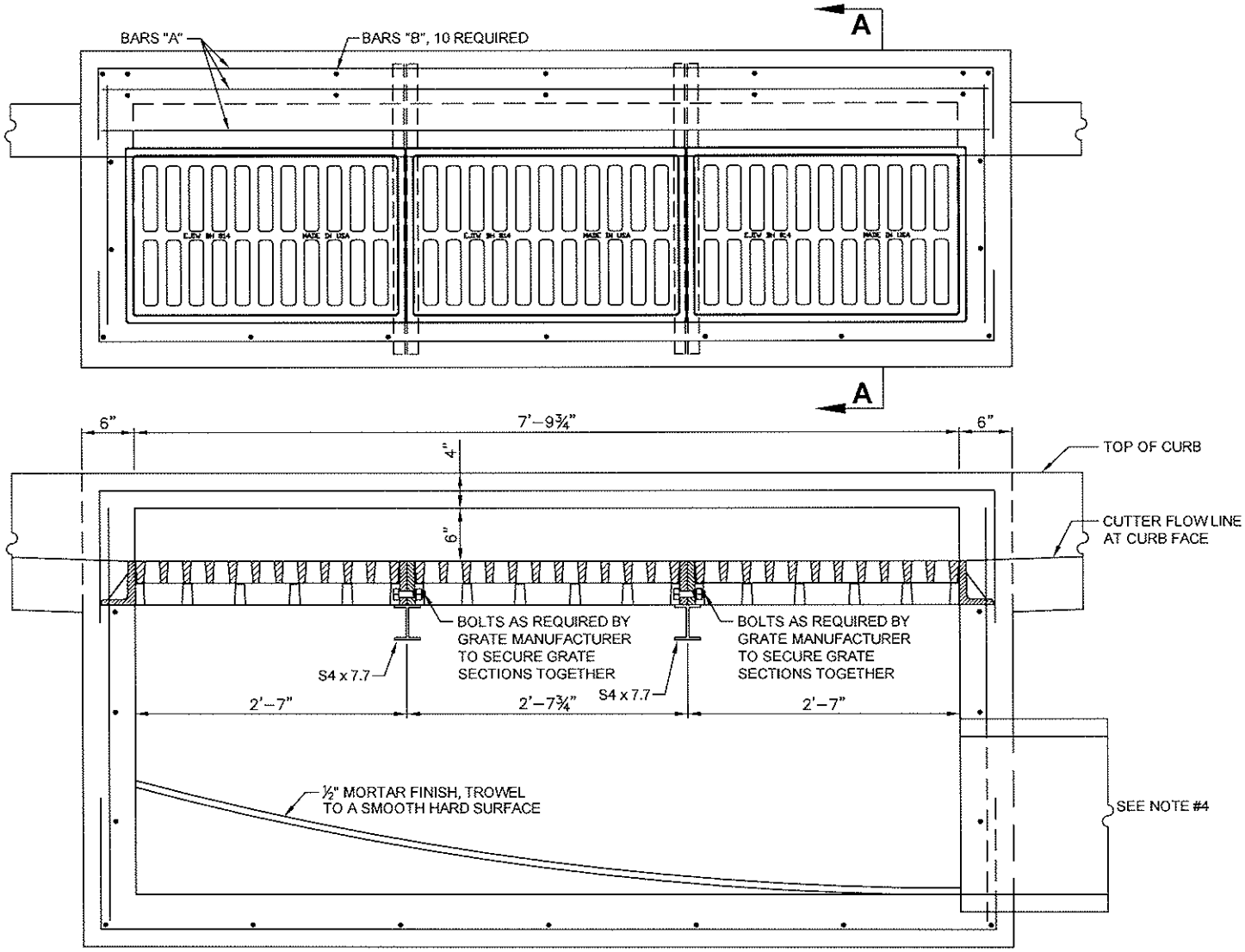

THREE GRATE INLET

CITY OF SACHSE, TEXAS DEPARTMENT OF ENGINEERING		
STANDARD CONSTRUCTION DETAILS STORM WATER		
GRATE INLETS		
APPROVED:		
DATE: NOVEMBER 2008	REVISED:	Page 3

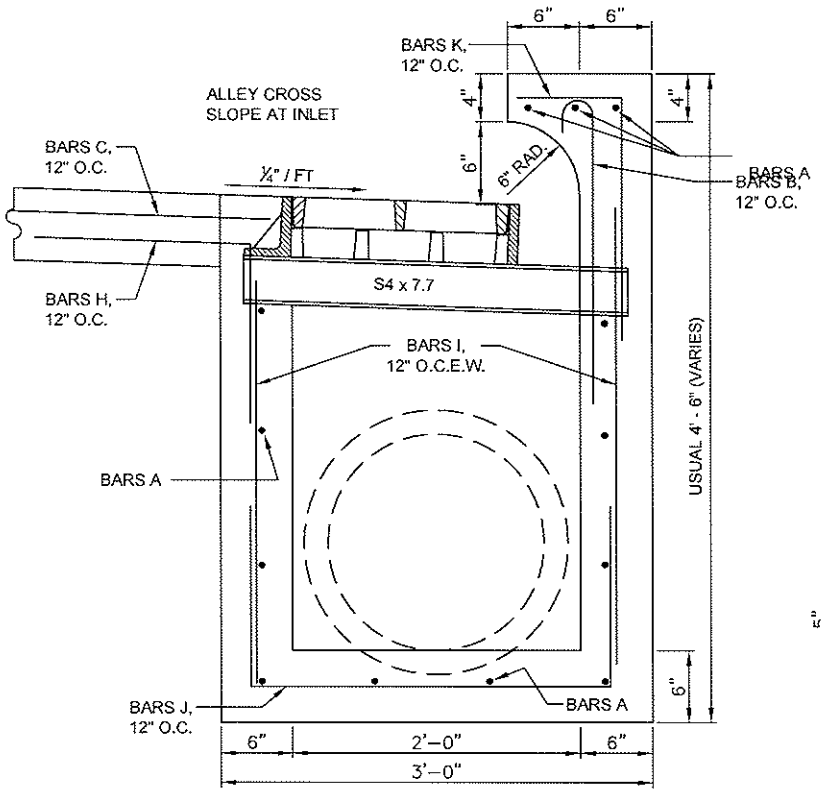

SECTION A-A

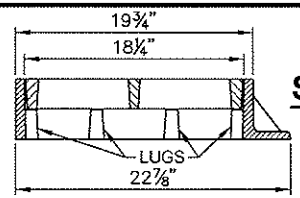

SECTION B-B

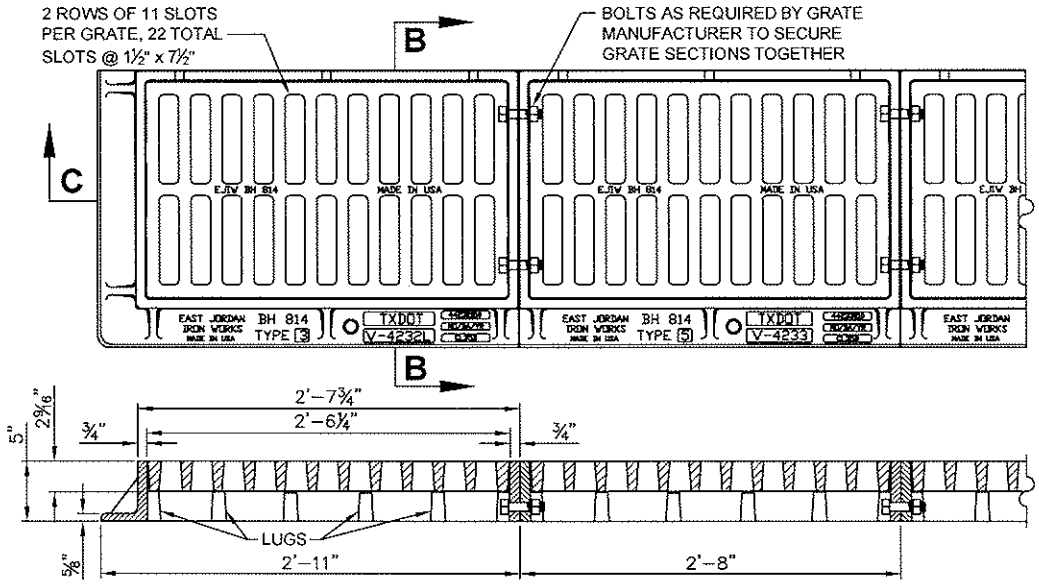

SECTION C-C

GRATE DETAILS

NOTE: GRATE AND FRAME SHALL BE AS MANUFACTURED BY BASS & HAYES, INC., MODEL #814 WITH STANDARD GRATE, OR APPROVED EQUAL

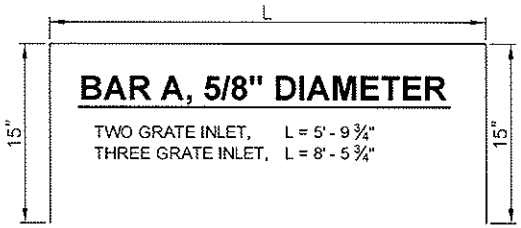

BAR A, 5/8" DIAMETER

TWO GRATE INLET, L = 5' - 9¾"
THREE GRATE INLET, L = 8' - 5¾"

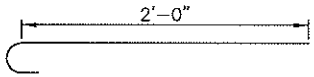

BAR B, 5/8" DIAMETER

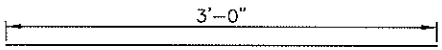

BAR C, 3/8" DIAMETER

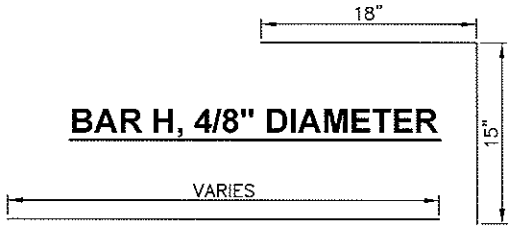

BAR H, 4/8" DIAMETER

BAR I, 4/8" DIAMETER

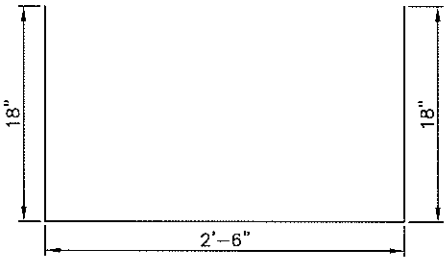

BAR J, 4/8" DIAMETER

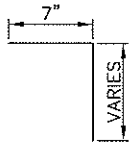

BAR K, 4/8" DIAMETER

CITY OF SACHSE, TEXAS DEPARTMENT OF ENGINEERING	
STANDARD CONSTRUCTION DETAILS STORM WATER	
GRATE INLETS	
APPROVED:	
DATE: NOVEMBER 2008	REVISED:

SECTION 3-D
CHANNEL SECTIONS

CITY OF SACHSE, TEXAS DEPARTMENT OF ENGINEERING		
STANDARD CONSTRUCTION DETAILS STORM WATER		
CHANNEL SECTIONS		
APPROVED:		
DATE: NOVEMBER 2008	REVISED:	Page 1

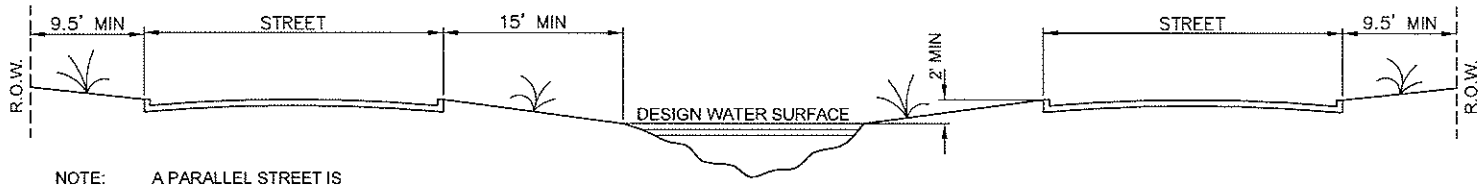

NOTE: A PARALLEL STREET IS RECOMMENDED EACH SIDE OF TYPE I CHANNELS. THE AREA BETWEEN THE STREETS SHOULD BE DEDICATED TO PUBLIC USE.

TYPE I - NATURAL

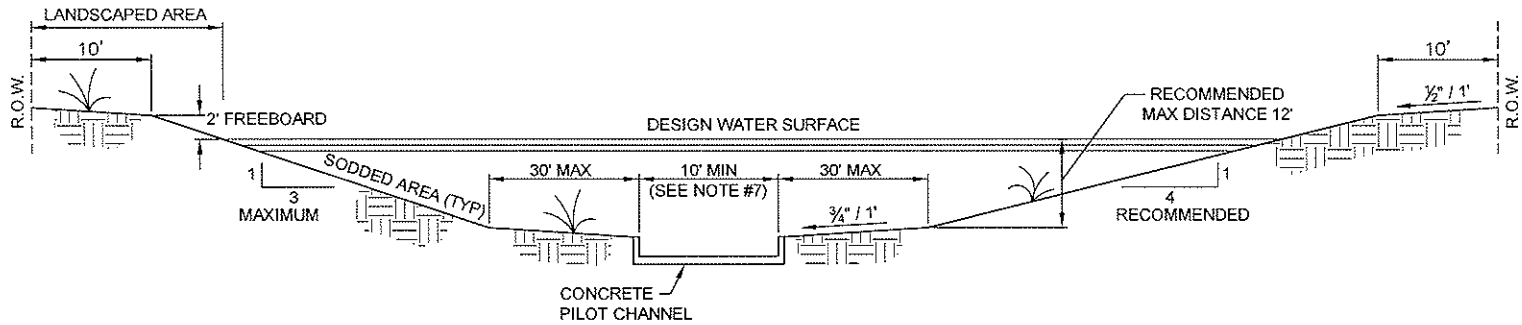

TYPE II - UNLINED WITH LINED PILOT CHANNEL

GENERAL NOTES FOR OPEN CHANNELS

1. CONSTRUCTION JOINT SHOWN FOR CONVENIENCE ONLY, MONOLITHIC CONSTRUCTION MAY BE USED.
2. ALL VISIBLE SURFACES SHALL BE A TROWEL FINISH.
3. ALL REINFORCING STEEL SHALL BE 3/8" DIAMETER AND SPACED 12" ON CENTER BOTH WAYS UNLESS OTHERWISE SPECIFIED.
4. TYPE I CHANNEL, A NATURAL CHANNEL, IS SHOWN FOR LOCATION OF ADJACENT STREETS.
5. IF WOOD FORMS ARE USED WITH CONSTRUCTION JOINT THEY SHALL BE TWO, 2"x4", AND SHALL NOT BE REMOVED UNTIL CONCRETE ON SLOPES IS READY TO BE PLACED.
6. ALL CONCRETE IN LINED CHANNEL SHALL BE 3000 P.S.I.
7. FLAT BOTTOM TO BE CONSTRUCTED WHEN CHANNEL WIDTH IS LESS THAN 12'.
8. PROVIDE CONCRETE OVERFLOW FLUME AT ALL SAG POINTS TO ACCOMMODATE 100 YR. FLOOD FREQUENCY.

CITY OF SACHSE, TEXAS DEPARTMENT OF ENGINEERING		
STANDARD CONSTRUCTION DETAILS STORM WATER		
CHANNEL SECTIONS		
APPROVED:		
DATE: NOVEMBER 2008	REVISED:	Page 2

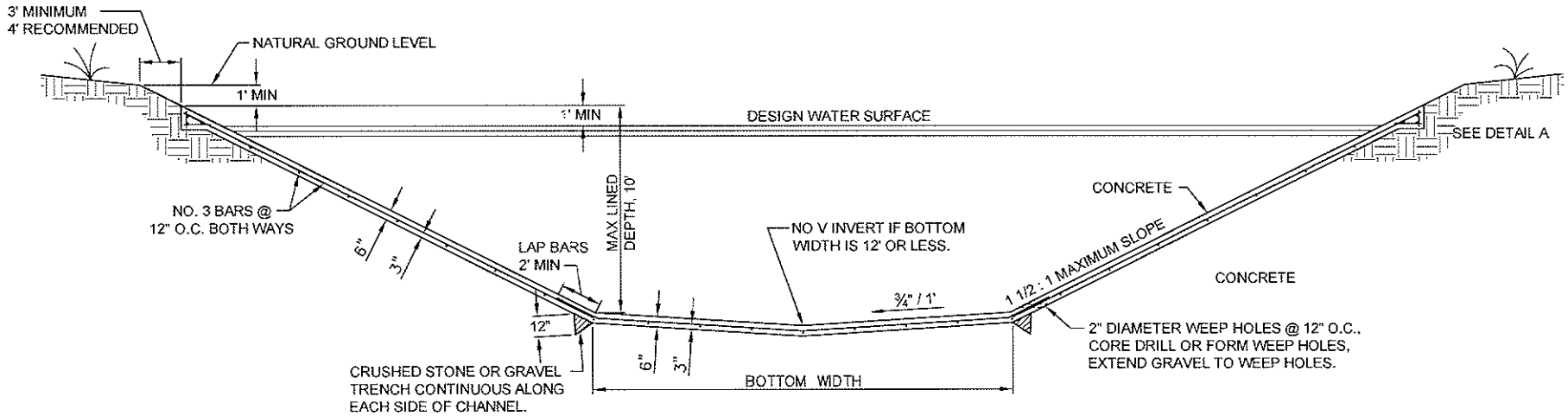

TYPE III - NORMAL CHANNEL SECTION

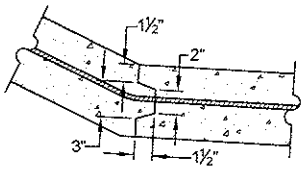

CONSTRUCTION JOINT

OPTIONAL

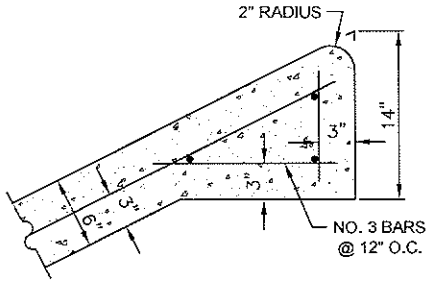

SLAB EDGE - DETAIL A

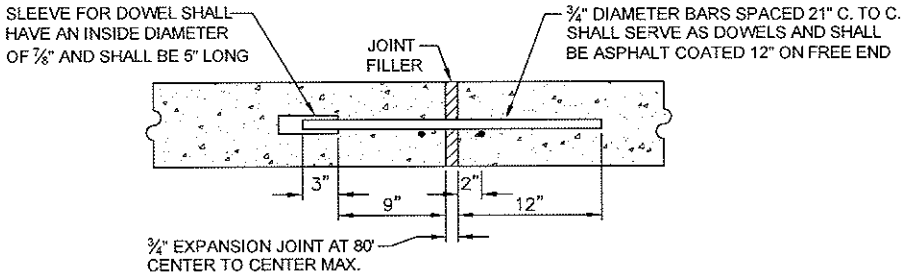

TRANSVERSE EXPANSION JOINT

CITY OF SACHSE, TEXAS DEPARTMENT OF ENGINEERING		
STANDARD CONSTRUCTION DETAILS STORM WATER		
CHANNEL SECTIONS		
APPROVED:		
DATE: NOVEMBER 2008	REVISED:	Page 3

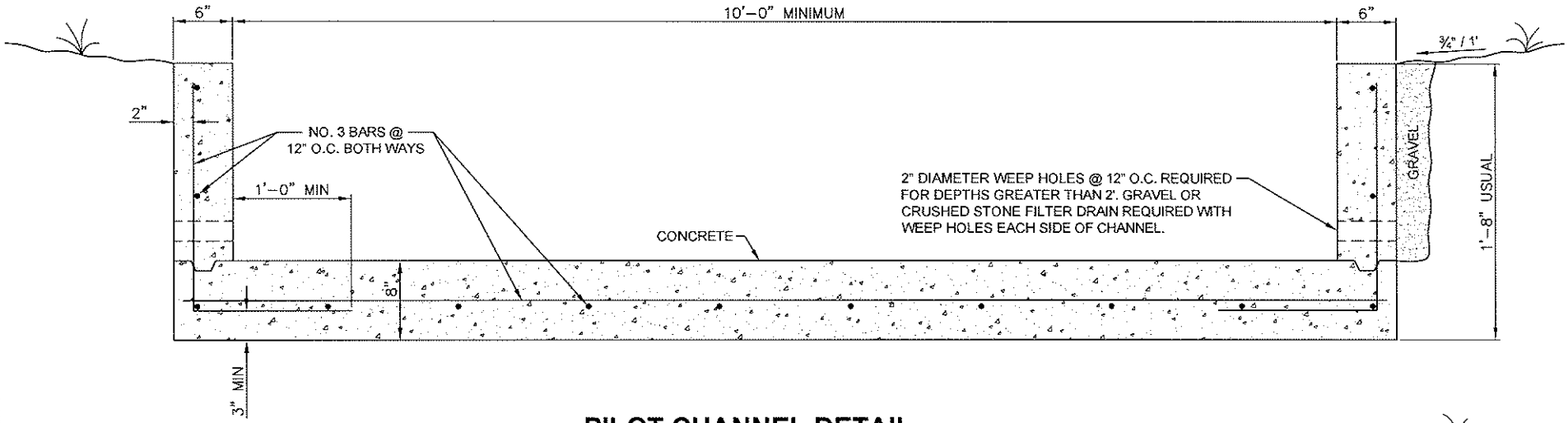

PILOT CHANNEL DETAIL

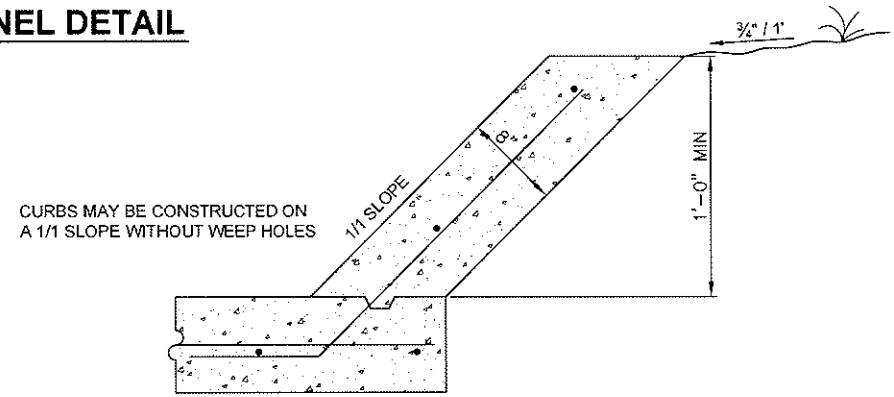

CITY OF SACHSE, TEXAS DEPARTMENT OF ENGINEERING		
STANDARD CONSTRUCTION DETAILS STORM WATER		
CHANNEL SECTIONS		
APPROVED:		
DATE: NOVEMBER 2008	REVISED:	Page 4

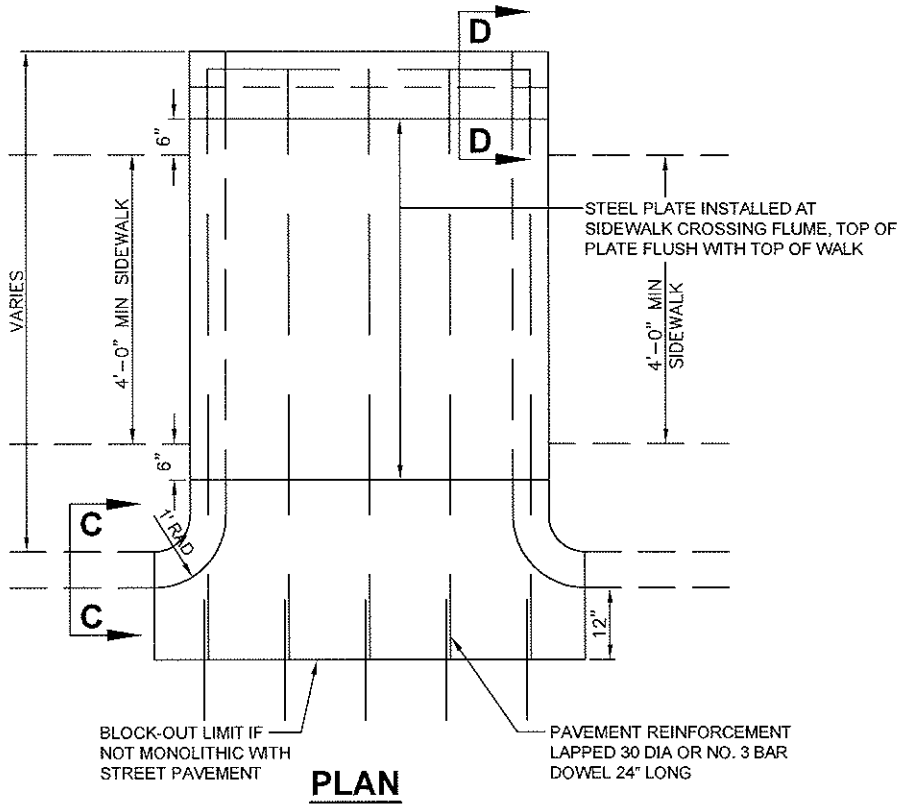

PLAN

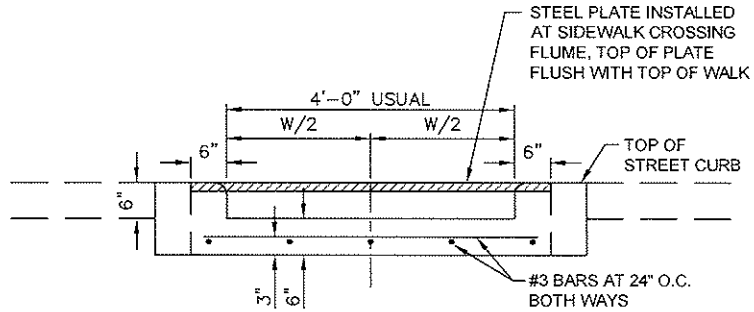

SECTION AT CURB FACE

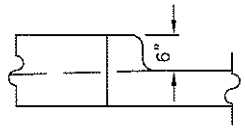

SECTION C-C

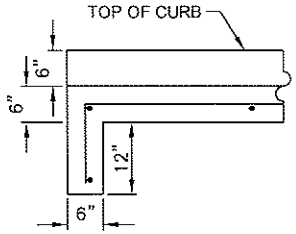

SECTION D-D

STEEL PLATE FLUME COVER

SPAN FEET	PLATE THICKNESS INCHES
4	1/2
6	5/8
8	3/4
10	7/8

BASED ON 100 P.S.I. LIVE LOAD AND MAX DEAD & LIVE LOAD DEFLECTION OF L/240. BOLT PLATE DOWN WITH BRASS BOLTS, SURFACE SHALL BE A NON-SKID MATERIAL.

CONCRETE FLUME UNDER SIDEWALK TROUGH CURB

CITY OF SACHSE, TEXAS
DEPARTMENT OF ENGINEERING

STANDARD CONSTRUCTION DETAILS
STORM WATER

CHANNEL SECTIONS

APPROVED:

DATE: NOVEMBER 2008 | REVISED: | Page 5

SECTION 4
SANITARY SEWER DETAILS

INDEX

CONTENTS	SECTION
MANHOLES, CLEANOUTS & CONNECTIONS	4-A
EMBEDMENT	4-B

4Δ

SECTION 4-A
MANHOLES, CLEANOUTS & CONNECTIONS

CITY OF SACHSE, TEXAS DEPARTMENT OF ENGINEERING		
STANDARD CONSTRUCTION DETAILS SANITARY SEWER		
MANHOLES, CLEANOUTS & CONNECTIONS		
APPROVED:		
DATE: NOVEMBER 2008	REVISED:	Page 1

GENERAL NOTES

1 All sanitary sewer pipe shall be PVC SDR-35 pipe. Other pipes shall be subject to approval by the City Engineer. No clay pipe.

2 Sanitary sewer pipe joints shall conform to current ASTM designation D-3034 for PVC pipe.

3 All sanitary sewer laterals shall include 4" tee wye bend, pipe and stopper installed downhill from center line of each lot. Each service shall serve only one unit structure, unless otherwise indicated on plans. No common taps.

4 Unless otherwise noted, all material and construction shall conform to the Standard Specifications of the City of Sachse, Texas.

5 In the event an item is not covered in the City of Sachse specifications, the City Engineer's decision shall apply.

6 Identify location of line.

7 Color to be green on PVC pipe with magnetic red color tape installed.

8 Sewer main to be located in center of street.

9 Sewer clean outs to be plugged with an expandable plug, not a cap or standard plug

10 For sanitary sewer lines, the manholes shall be 4' inside diameter for line size 6" thru 21" and 5' inside diameter for line size 24" thru 36".

11 All sanitary sewer manholes whose invert is greater than sixteen (16) feet below grade, shall be 5' diameter or larger.

12 All sanitary sewer lines shall be tested with low pressure air per standard test procedure.

13 All sanitary sewer lines shall conform and be tested to pass a standard mandrill test.

14 All manholes shall be tested for infiltration through either water, air or vacuum standard testing procedures.

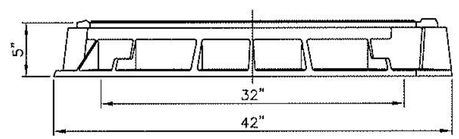

NOTES:

1. Manhole cover and frame shall be called PAMREX or approved equal. Cover and frame shall be manufactured from Ductile Iron.
2. Covers shall be dually hinged and incorporate a 90 degree blocking system to prevent accidental closure. Covers shall be one man operable using standard tools and shall be capable of withstanding a test load of 80,000 lbs.
3. Frames shall be circular, incorporate a seating ring and a fitted plug in each hinge housing, and be available in a 32 inch clear opening. The frame depth shall not exceed 5 inches, and the flange shall incorporate bedding slots, bolt holes, and lifting eyes.
4. All components shall be black coated.

Frame weight: 107 lbs.
Cover weight: 162 lbs.
Total weight: 269 lbs.

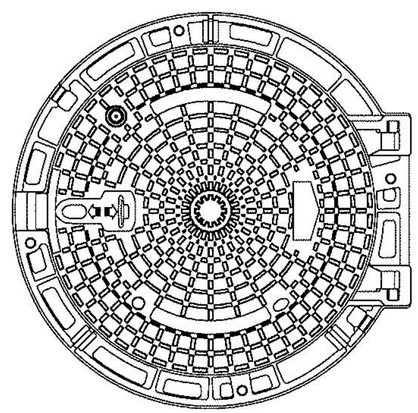

MANHOLE GRATE AND FRAME DETAIL

CITY OF SACHSE, TEXAS DEPARTMENT OF ENGINEERING		
STANDARD CONSTRUCTION DETAILS SANITARY SEWER		
MANHOLES, CLEANOUTS & CONNECTIONS		
APPROVED:		
DATE: NOVEMBER 2008	REVISED:	Page 2

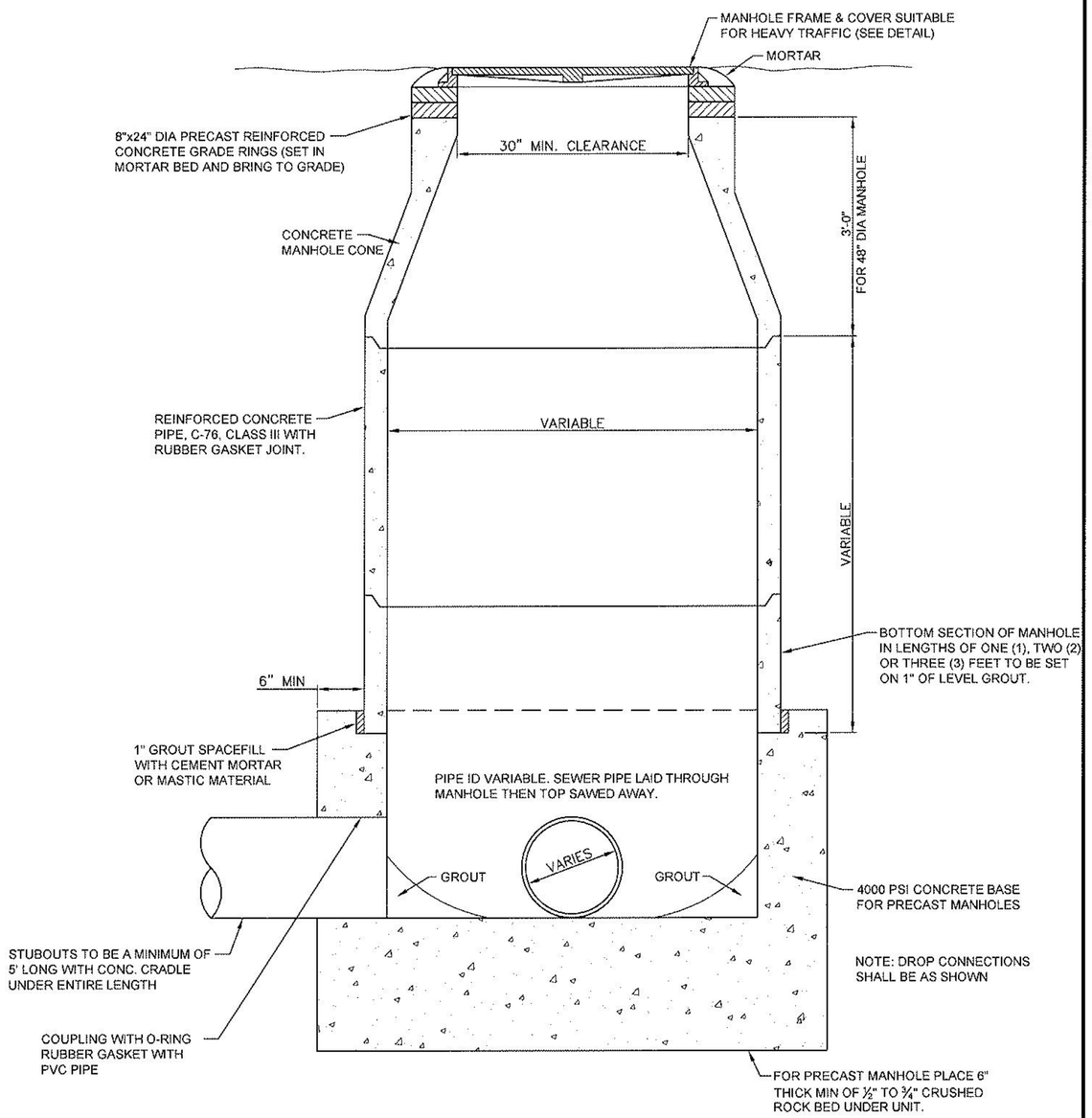

PRECAST CONCRETE PIPE MANHOLE

NOTES Pour in place, or pre-fabricated RC pipe manhole shall be used.

MANHOLE SPACING SHALL BE 550' ON CENTER OR AT ANGLE POINTS OR AS DESIGNATED UNLESS APPROVED OTHERWISE BY CITY

CITY OF SACHSE, TEXAS DEPARTMENT OF ENGINEERING		
STANDARD CONSTRUCTION DETAILS SANITARY SEWER		
MANHOLES, CLEANOUTS & CONNECTIONS		
APPROVED:		
DATE: NOVEMBER 2008	REVISED:	Page 3

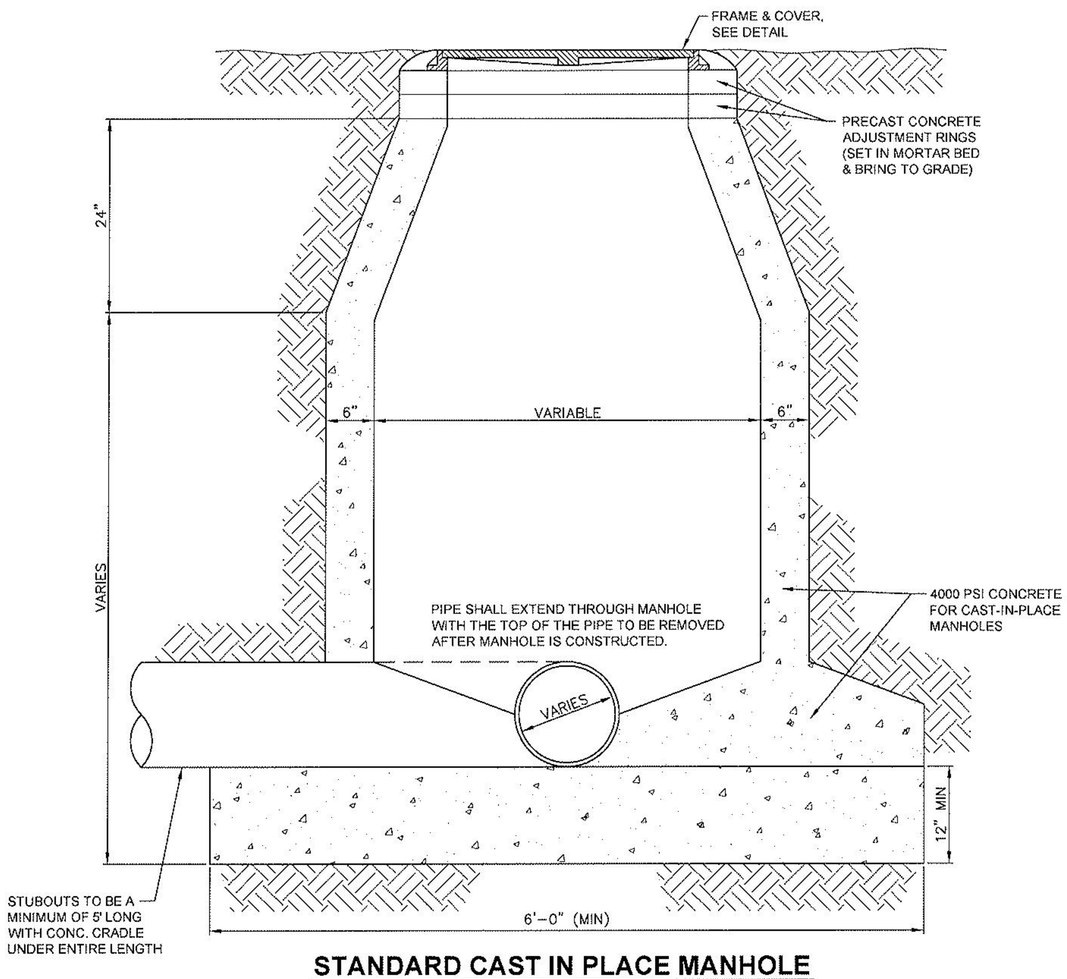

STANDARD CAST IN PLACE MANHOLE

NOTES
1. Keyways required for all construction joints
2. PVC water stop required for all joints in lower 4'-0" of manholes
3. Concrete shall be 4000 psi

MANHOLE SPACING SHALL BE 550' ON CENTER OR AT ANGLE POINTS OR AS DESIGNATED UNLESS APPROVED OTHERWISE BY CITY

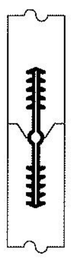

STANDARD 2x4 KEYWAY, ROUGHEN EDGES PRIOR TO MAKING SECOND POUR

PROVIDE 4" HEAVY DUTY PVC WATERSTOP AT ALL CONST. JOINTS

KEYWAY WITH WATERSTOP

CITY OF SACHSE, TEXAS DEPARTMENT OF ENGINEERING		
STANDARD CONSTRUCTION DETAILS SANITARY SEWER		
MANHOLES, CLEANOUTS & CONNECTIONS		
APPROVED:		
DATE: NOVEMBER 2008	REVISED:	Page 4

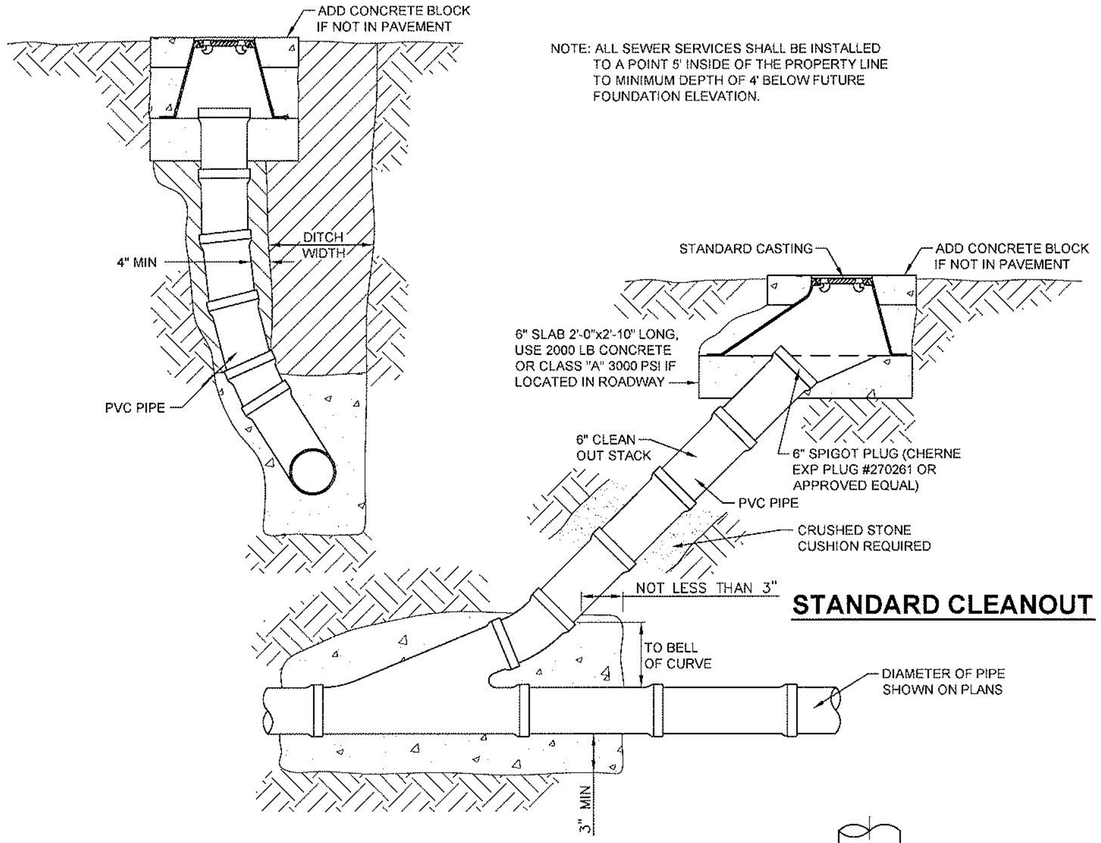

STANDARD CLEANOUT

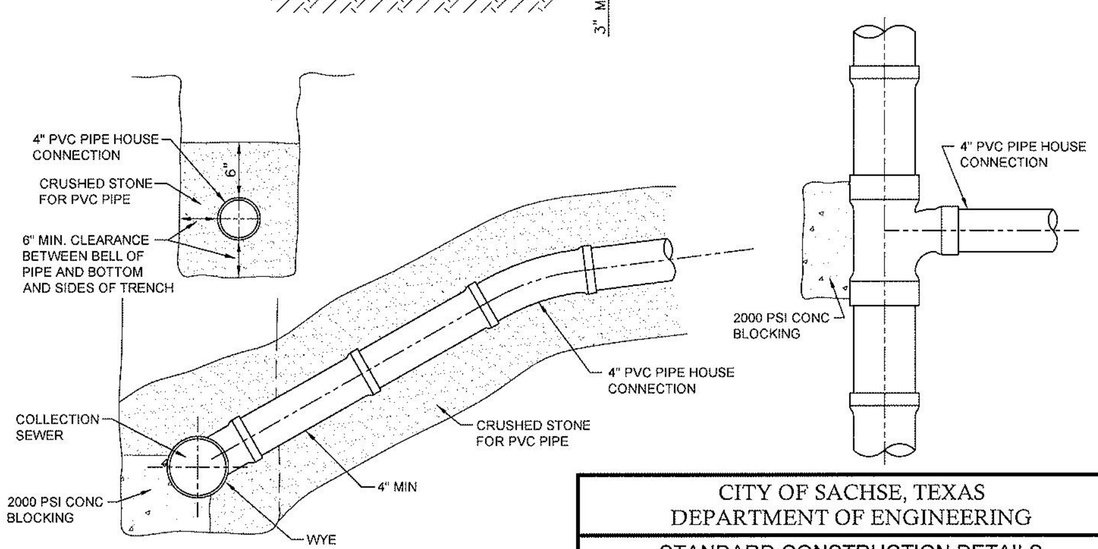

TYPICAL SEWER HOUSE SERVICE CONNECTION

CITY OF SACHSE, TEXAS DEPARTMENT OF ENGINEERING		
STANDARD CONSTRUCTION DETAILS SANITARY SEWER		
MANHOLES, CLEANOUTS & CONNECTIONS		
APPROVED:		
DATE: NOVEMBER 2008	REVISED:	Page 5

4B

SECTION 4-B
EMBEDMENT

CITY OF SACHSE, TEXAS DEPARTMENT OF ENGINEERING		
STANDARD CONSTRUCTION DETAILS SANITARY SEWER		
EMBEDMENT		
APPROVED:		
DATE: NOVEMBER 2008	REVISED:	Page 1

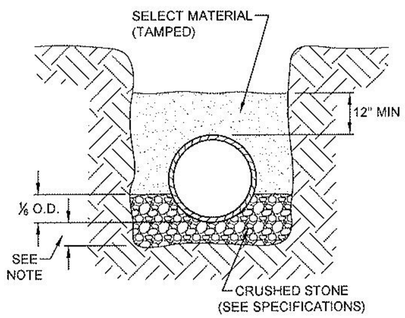

CLASS 1 EMBEDMENT

LF = 1.5

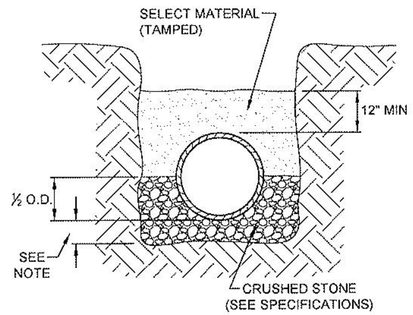

CLASS 2 EMBEDMENT

LF = 1.9

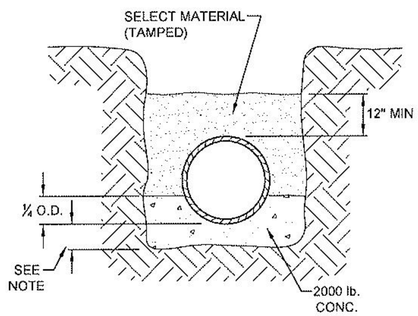

CLASS 3 EMBEDMENT

LF = 28

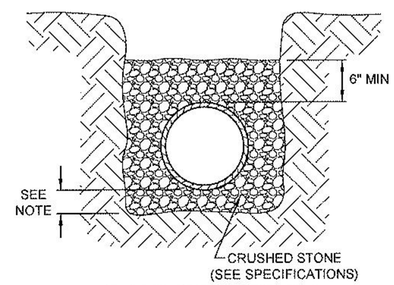

CLASS 4 EMBEDMENT

LF = 20

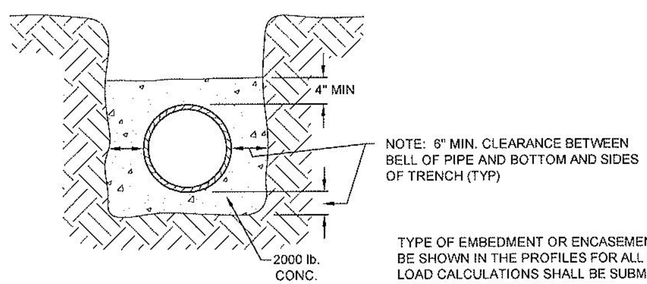

CONCRETE ENCASEMENT

LF = 42

TYPE OF EMBEDMENT OR ENCASEMENT SHALL BE SHOWN IN THE PROFILES FOR ALL LINES. LOAD CALCULATIONS SHALL BE SUBMITTED TO THE ENGINEERING DEPARTMENT.

P.V.C. PIPE ONLY

CITY OF SACHSE, TEXAS DEPARTMENT OF ENGINEERING		
STANDARD CONSTRUCTION DETAILS SANITARY SEWER		
EMBEDMENT		
APPROVED:		
DATE: NOVEMBER 2008	REVISED:	Page 2

TABLE OF QUANTITIES OF 2000 PSI CONCRETE, GRAVEL OR CRUSHED STONE IN CUBIC YARDS PER 100 LINEAR FEET FOR EACH CLASS EMBEDMENT

TABLE OF QUANTITIES PER 100 LINEAR FEET REINFORCED CONCRETE PIPE (IN CUBIC YARDS)

SIZE OF PIPE IN INCHES ID	OD OF PIPE IN INCHES	TRENCH WIDTH IN INCHES	TRENCH WIDTH IN FEET	CLASS 1 EMBEDMENT CRUSHED STONE	CLASS 2 EMBEDMENT CRUSHED STONE	CLASS 3 EMBEDMENT CONCRETE	CONCRETE ENCASEMENT
12	16.00	32	2.67	4.1	6.5	4.8	15.8
15	19.50	36	3.00	4.8	7.8	6.4	19.2
18	23.00	39	3.25	5.7	9.2	8.2	21.2
21	26.50	43	3.58	6.9	11.0	10.2	24.9
24	30.00	46	3.83	8.3	13.1	12.4	28.7
27	33.50	51	4.25	10.3	16.1	14.4	32.8
30	37.00	57	4.75	12.7	20.1	17.0	34.8
33	40.50	62	5.17	15.1	23.8	19.3	39.2
36	44.00	67	5.58	18.0	28.6	22.1	43.8

TABLE OF QUANTITIES PER 100 LINEAR FEET PVC PIPE (IN CUBIC YARDS)

SIZE OF PIPE IN INCHES ID	OD OF PIPE IN INCHES	TRENCH WIDTH IN INCHES	TRENCH WIDTH IN FEET	CLASS 4 EMBEDMENT CRUSHED STONE	CONCRETE ENCASEMENT
6	6.28	18	1.50	8.0	11.7
8	8.16	24	2.00	8.7	12.4
10	10.20	26	2.18	10.2	14.2
12	12.24	28	2.35	11.7	15.9
15	15.30	31	2.61	14.0	18.8

TABLE OF QUANTITIES PER 100 LINEAR FEET (IN CUBIC YARDS)

SIZE OF PIPE IN INCHES ID	OD OF PIPE IN INCHES	TRENCH WIDTH IN INCHES	TRENCH WIDTH IN FEET	CLASS 1 EMBEDMENT CRUSHED STONE	CLASS 2 EMBEDMENT CRUSHED STONE	CLASS 3 EMBEDMENT CONCRETE	CONCRETE ENCASEMENT
8	9.75	26	2.17	2.9	4.3	3.3	10.9
10	12.00	28	2.33	3.3	5.0	3.7	12.5
12	14.25	30	2.50	3.7	5.8	4.3	14.2
15	17.80	36	3.00	4.8	7.8	7.0	17.5
18	21.45	39	3.25	5.6	9.1	8.9	21.0
21	25.00	43	3.58	6.7	11.0	11.1	23.0
24	28.50	46	3.83	8.0	12.9	12.3	26.8
27	32.10	51	4.25	10.0	15.9	14.3	30.8
30	35.60	57	4.75	12.4	19.8	16.8	34.9
33	38.95	61	5.08	14.5	22.9	18.7	37.0
36	42.25	66	5.50	17.0	26.8	21.1	41.5

CITY OF SACHSE, TEXAS
DEPARTMENT OF ENGINEERING

STANDARD CONSTRUCTION DETAILS
SANITARY SEWER

EMBEDMENT

APPROVED:

DATE: NOVEMBER 2008 | REVISED: | Page 3

SECTION 5
WATER DETAILS

INDEX

CONTENTS	SECTION
VALVES	5-A
FIRE HYDRANTS	5-B
DETAILS	5-C

SECTION 5-A
VALVES

CITY OF SACHSE, TEXAS DEPARTMENT OF ENGINEERING		
STANDARD CONSTRUCTION DETAILS WATER DETAILS		
VALVES		
APPROVED:		
DATE: NOVEMBER 2008	REVISED:	Page 1

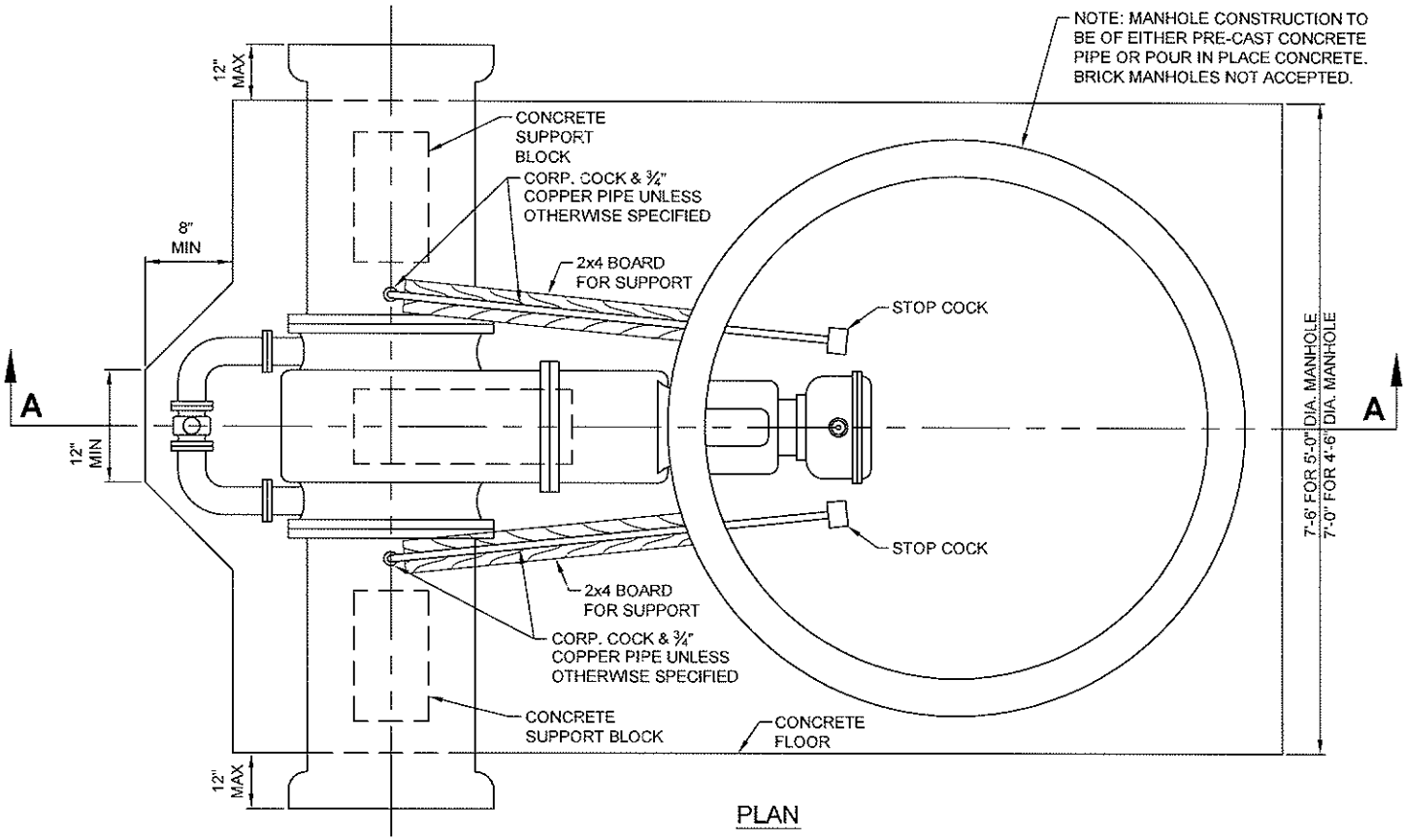

HORIZONTAL VALVE INSTALLATION

CITY OF SACHSE, TEXAS DEPARTMENT OF ENGINEERING		
STANDARD CONSTRUCTION DETAILS WATER DETAILS		
VALVES		
APPROVED:		
DATE: NOVEMBER 2008	REVISED:	Page 2

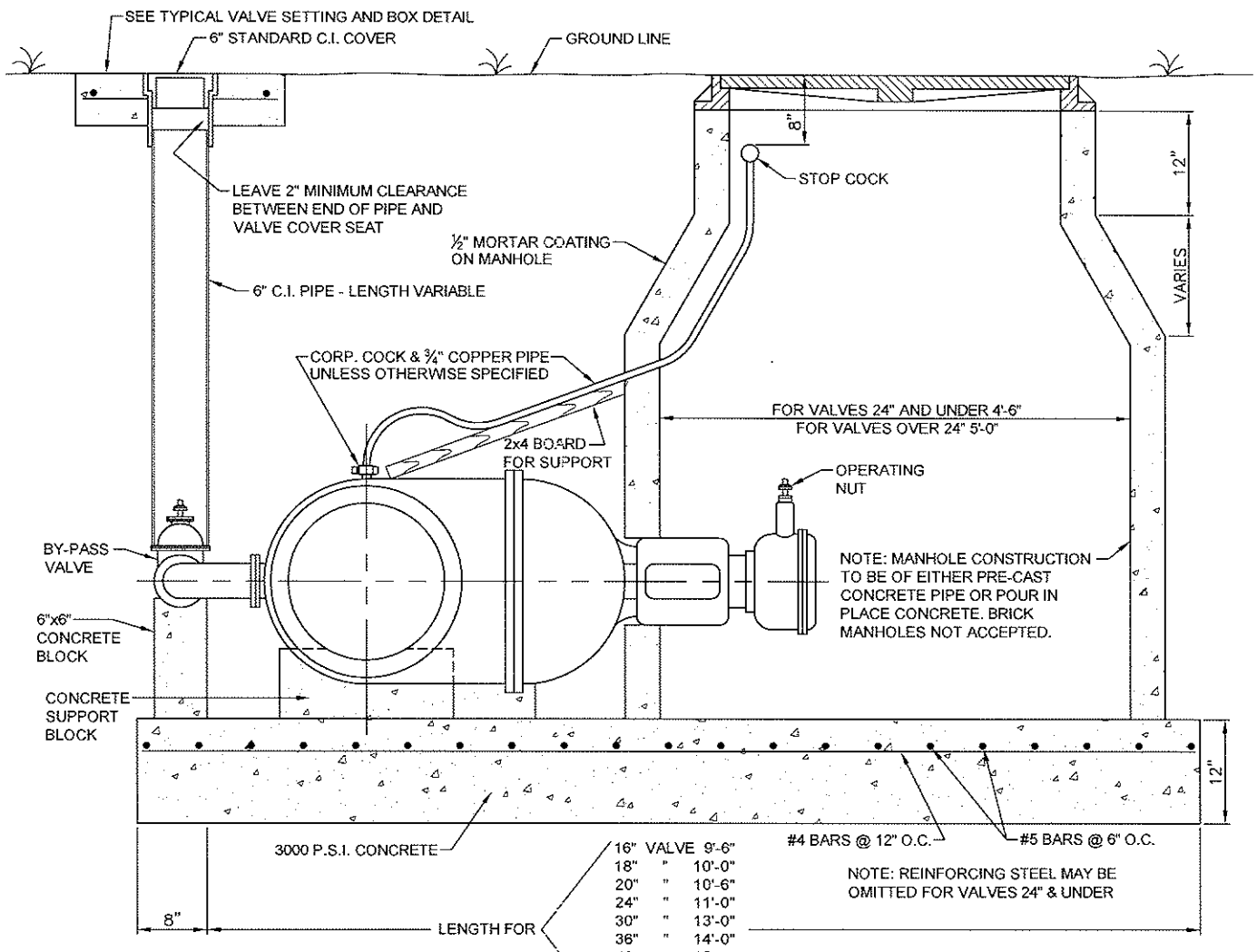

VALVE SHALL BE MUELLER A-2361-06 USING BEVEL GEARING OR A-2361-07 USING SPUR GEARING OR APPROVED EQUAL

SECTION A-A

HORIZONTAL VALVE INSTALLATION

CITY OF SACHSE, TEXAS DEPARTMENT OF ENGINEERING		
STANDARD CONSTRUCTION DETAILS WATER DETAILS		
VALVES		
APPROVED:		
DATE: NOVEMBER 2008	REVISED:	Page 3

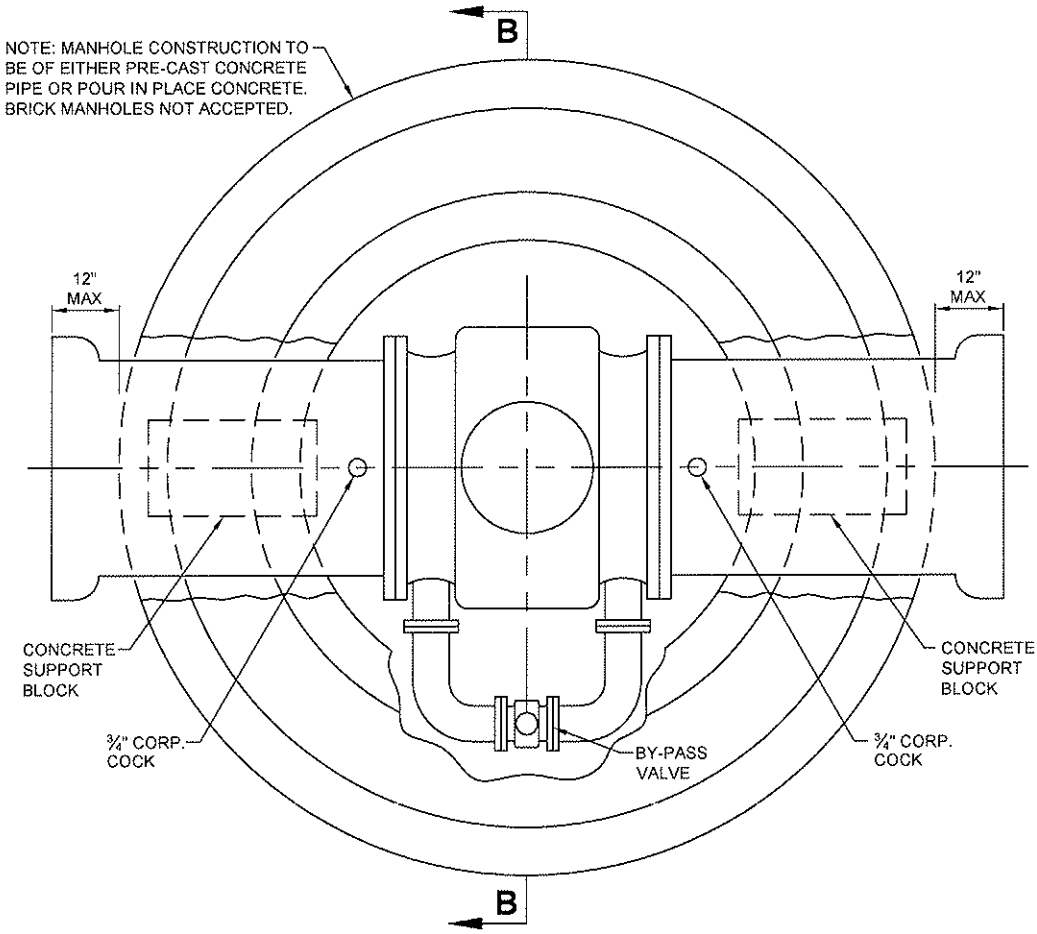

PLAN

VERTICAL VALVE INSTALLATION

CITY OF SACHSE, TEXAS DEPARTMENT OF ENGINEERING		
STANDARD CONSTRUCTION DETAILS WATER DETAILS		
VALVES		
APPROVED:		
DATE: NOVEMBER 2008	REVISED:	Page 4

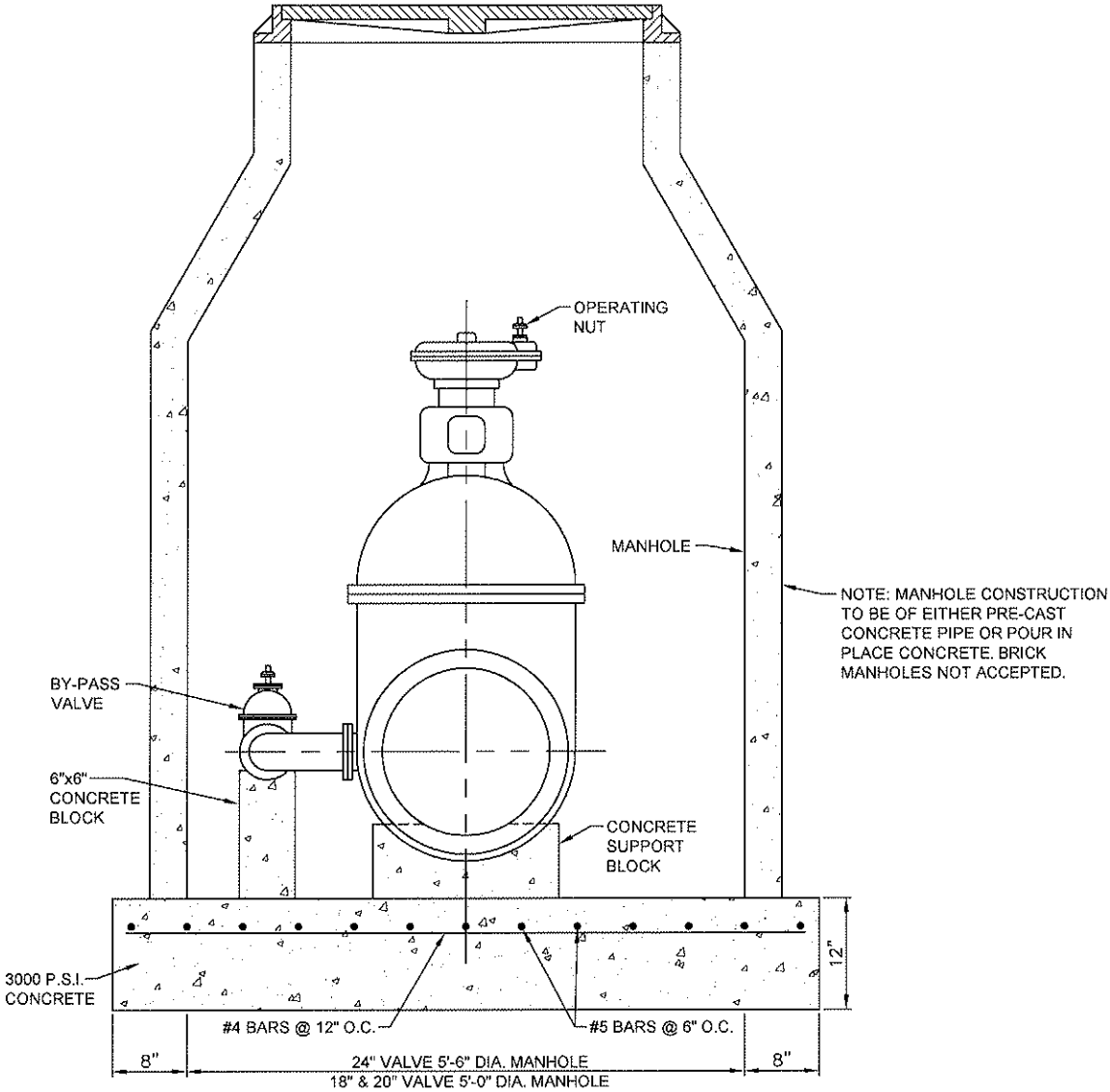

SECTION B-B

VERTICAL VALVE INSTALLATION

CITY OF SACHSE, TEXAS DEPARTMENT OF ENGINEERING		
STANDARD CONSTRUCTION DETAILS WATER DETAILS		
VALVES		
APPROVED:		
DATE: NOVEMBER 2008	REVISED:	Page 5

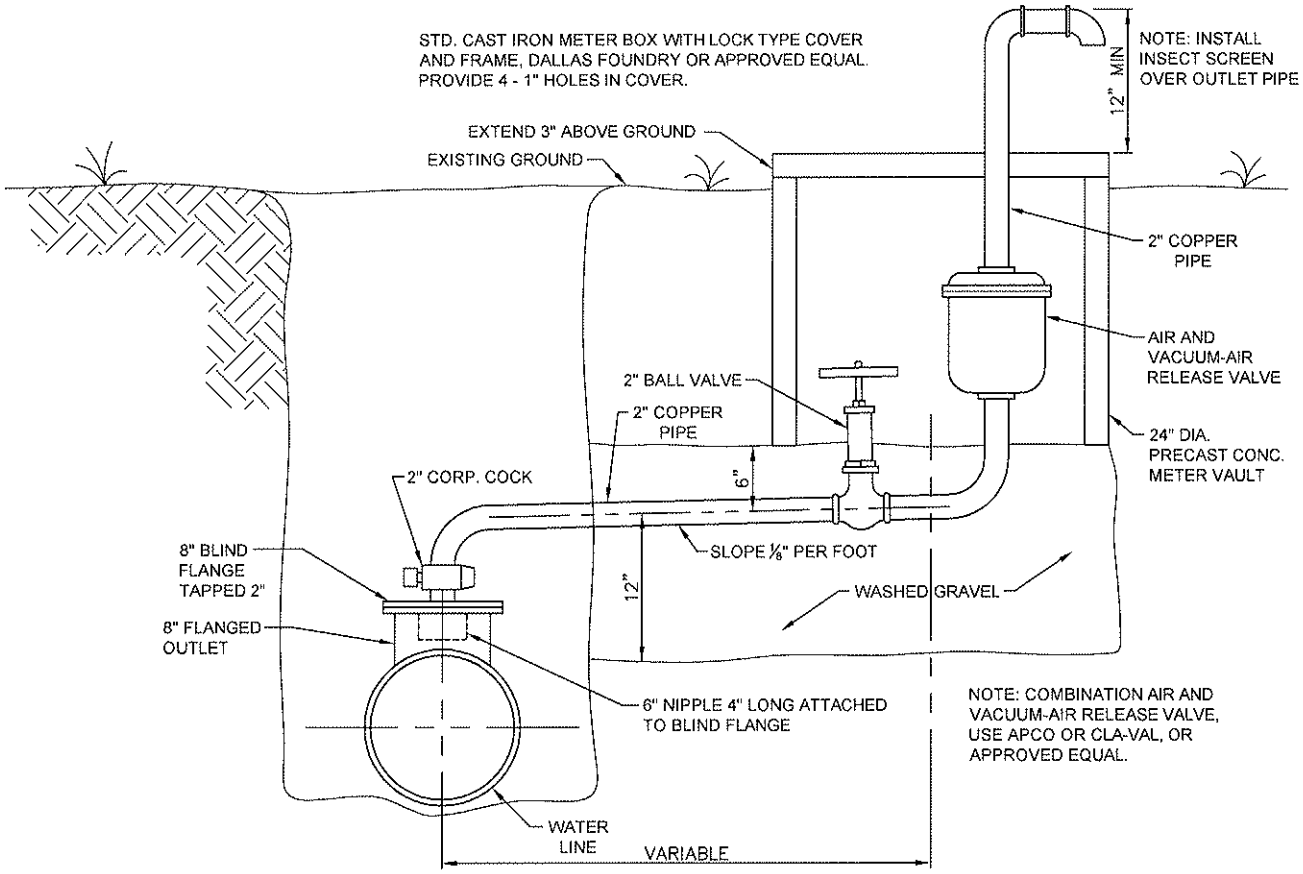

TYPICAL AIR AND VACUUM - AIR RELEASE VALVE INSTALLATION

CITY OF SACHSE, TEXAS DEPARTMENT OF ENGINEERING		
STANDARD CONSTRUCTION DETAILS WATER DETAILS		
VALVES		
APPROVED:		
DATE: NOVEMBER 2008	REVISED:	Page 6

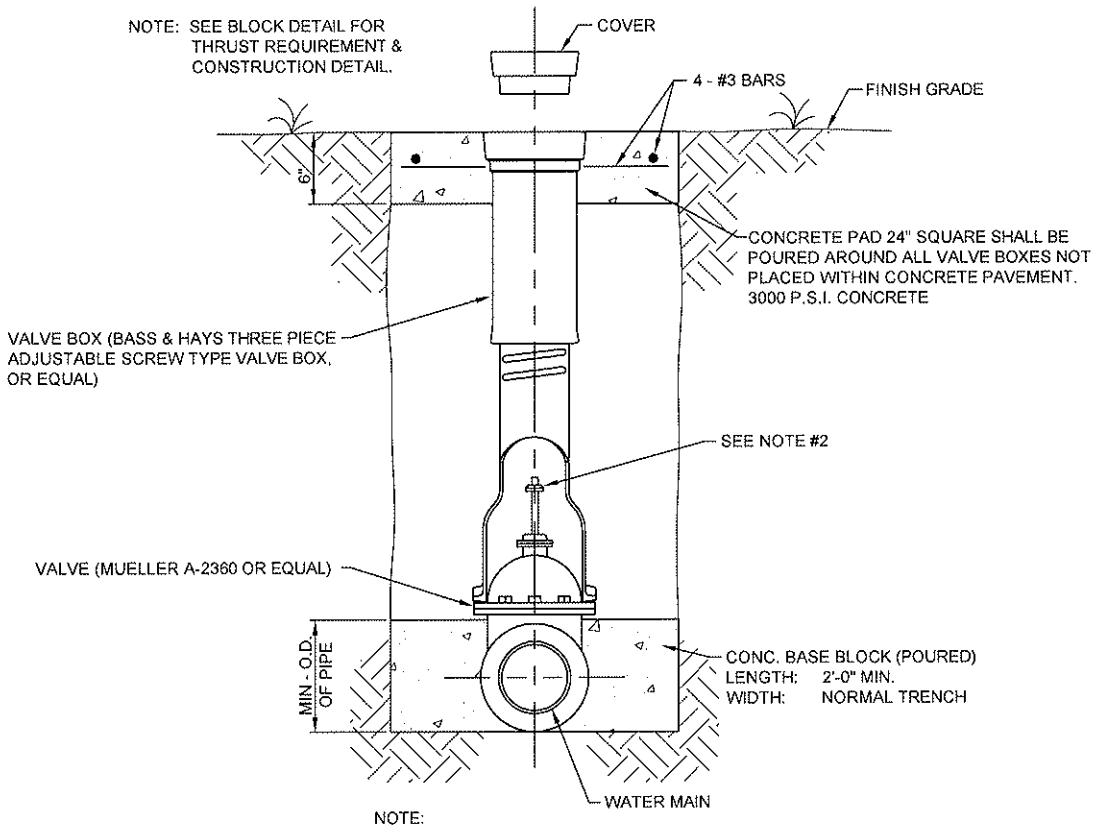

NOTE:

1. 6" - 12" R.S. GATE VALVES SHALL BE IN ACCORDANCE WITH AWWA STANDARD C-509-80 OR LATEST THEREOF. ALL VALVES SHALL BE MUELLER A-2360 OR APPROVED EQUAL.

2. A PERMANENTLY ATTACHED VALVE EXTENSION STEM SHALL BE REQUIRED FOR ANY VALVE THAT HAS AN OPERATING NUT IN EXCESS OF 4 FEET BELOW THE TOP OF VALVE BOX. THIS EXTENSION SHALL BE OF SUFFICIENT LENGTH TO ENSURE THAT THE TOP OF EXTENSION IS WITHIN 4' OF VALVE BOX LID.

TYPICAL VALVE SETTING AND BOX

CITY OF SACHSE, TEXAS DEPARTMENT OF ENGINEERING		
STANDARD CONSTRUCTION DETAILS WATER DETAILS		
VALVES		
APPROVED:		
DATE: NOVEMBER 2008	REVISED:	Page 7

SECTION 5-B
FIRE HYDRANT

CITY OF SACHSE, TEXAS DEPARTMENT OF ENGINEERING		
STANDARD CONSTRUCTION DETAILS WATER DETAILS		
FIRE HYDRANT		
APPROVED:		
DATE: NOVEMBER 2008	REVISED:	Page 1

NOTE: FIRE HYDRANTS SHALL BE MUELLER SUPER CENTURION NO. 250 OR APPROVED EQUAL AND CONFORM TO AWWA STANDARD SPECIFICATIONS FOR FIRE HYDRANTS FOR ORDINARY WATER WORKS SERVICE C-502-73, EXCEPT FOR CHANGES OR ADDITIONS OUTLINED IN THE CITY OF SACHSE STANDARD SPECIFICATIONS FOR WATER AND SANITARY SEWER IMPROVEMENTS. FIRE HYDRANTS SHALL HAVE A 5¼ INCH MINIMUM VALVE OPENING AND WITH A BARREL APPROXIMATELY 7 INCH INSIDE DIAMETER. ALL HYDRANTS SHALL BE EQUIPPED WITH A BREAKAWAY FLANGE. ALL HYDRANTS SHALL BE APPROVED IN ACCORDANCE WITH THE CITY OF SACHSE SPECIFICATIONS.

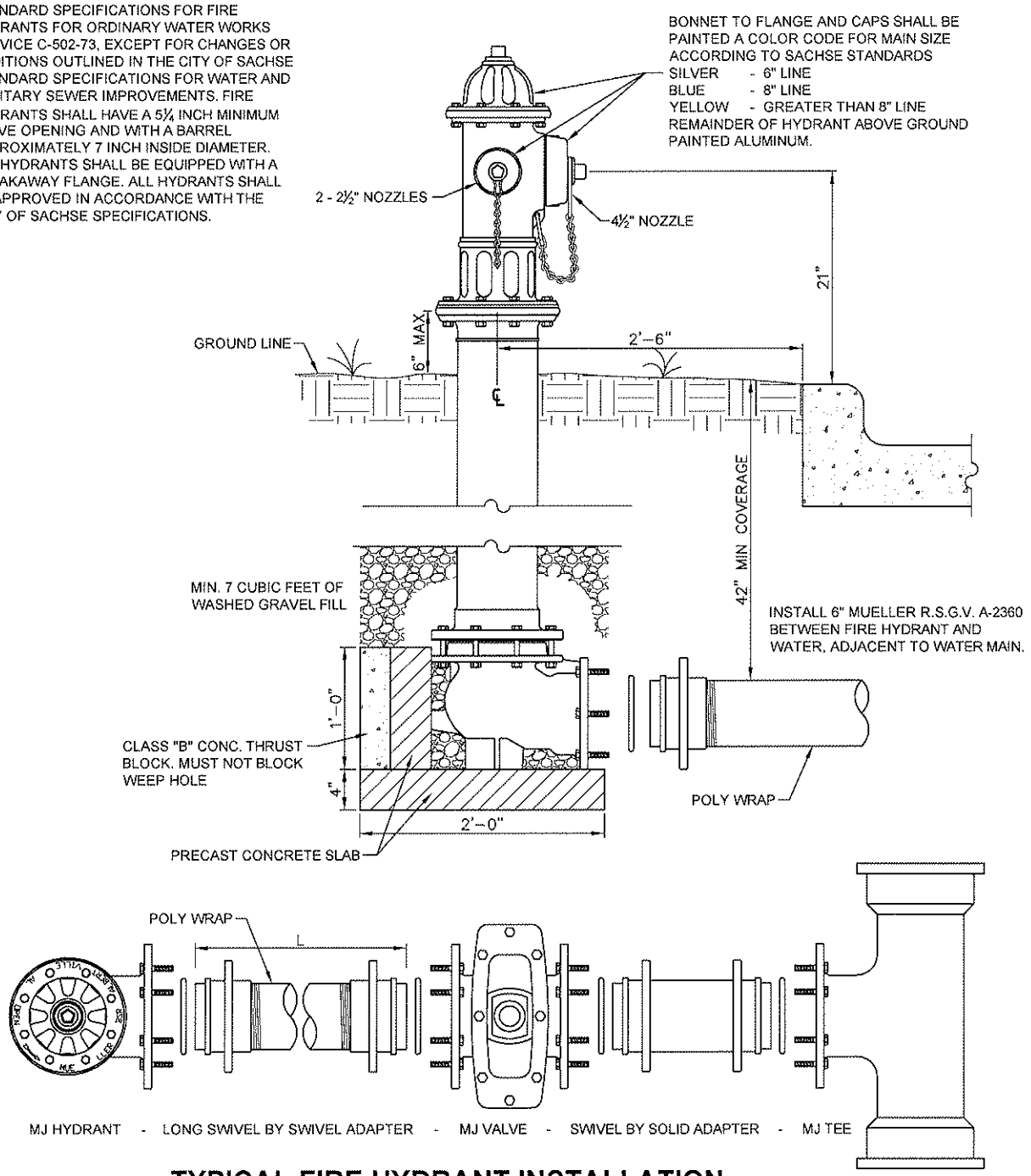

TYPICAL FIRE HYDRANT INSTALLATION

CITY OF SACHSE, TEXAS DEPARTMENT OF ENGINEERING		
STANDARD CONSTRUCTION DETAILS WATER DETAILS		
FIRE HYDRANT		
APPROVED:		
DATE: NOVEMBER 2008	REVISED:	Page 2

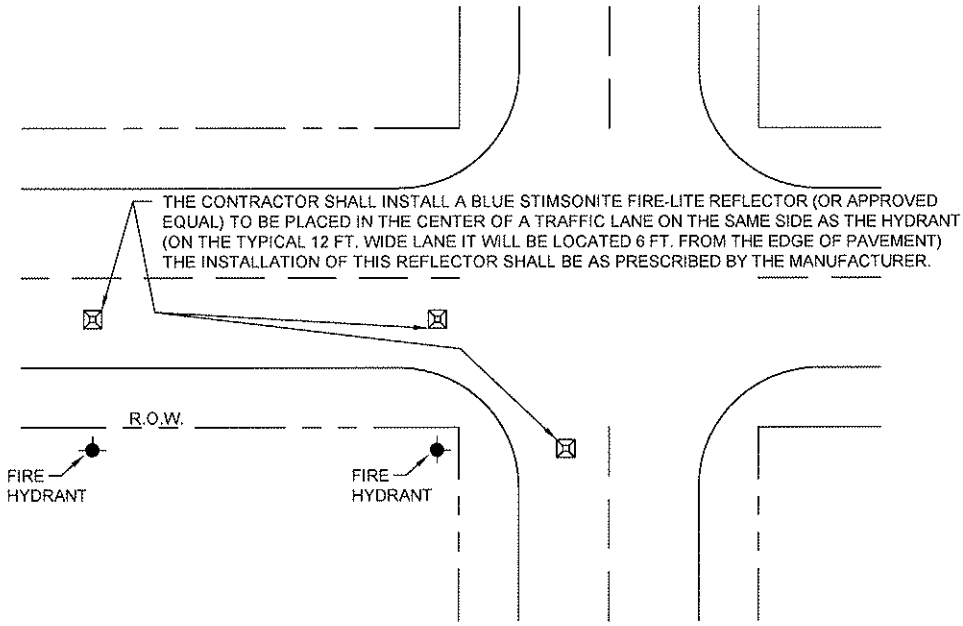

TYPICAL FIRE HYDRANT REFLECTOR INSTALLATION

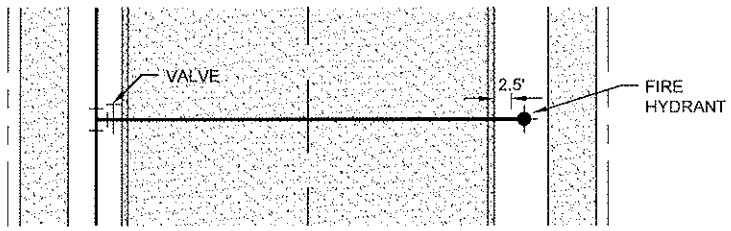

TYPICAL FAR SIDE HYDRANT INSTALLATION

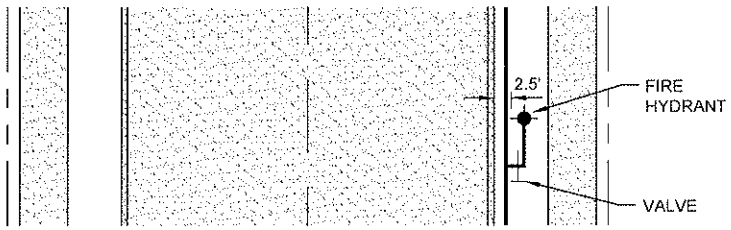

TYPICAL NEAR SIDE HYDRANT INSTALLATION

CITY OF SACHSE, TEXAS DEPARTMENT OF ENGINEERING		
STANDARD CONSTRUCTION DETAILS WATER DETAILS		
FIRE HYDRANT		
APPROVED:		
DATE: NOVEMBER 2008	REVISED:	Page 3

SECTION 5-C
DETAILS

CITY OF SACHSE, TEXAS DEPARTMENT OF ENGINEERING		
STANDARD CONSTRUCTION DETAILS WATER DETAILS		
DETAILS		
APPROVED:		
DATE: NOVEMBER 2008	REVISED:	Page 1

GENERAL NOTES

ALL CALCULATIONS ARE BASED ON TOTAL INTERNAL PRESSURE OF 150 P.S.I. ALLOWABLE SOIL BEARING PRESSURES MUST BE AT LEAST ONE TON PER SQUARE FOOT FOR THE THRUST BLOCKS SHOWN. IN SOILS OF LESSER CAPACITY, INCREASE SIZE AND BEARING AREA PROPORTIONATELY. VOLUMES OF VERTICAL BEND THRUST BLOCKS ARE NET VOLUMES OF CONCRETE TO BE FURNISHED AND THE CORRESPONDING WEIGHT OF THE CONCRETE (AT 4,000# C.Y.) EQUALS THE VERTICAL COMPONENT OF THRUST ON THE VERTICAL BEND. ALL BEARING SURFACES OF THRUST BLOCKS SHALL BE POURED AGAINST UNDISTURBED EARTH. CONCRETE FOR BLOCKING SHALL BE 2,000 LB. CONCRETE. DIMENSIONS MAY BE VARIED AS REQUIRED BY FIELD CONDITIONS WHERE AND AS DIRECTED BY THE ENGINEER BUT SHALL NOT BE LESS THAN THE DIMENSION SHOWN HERE.

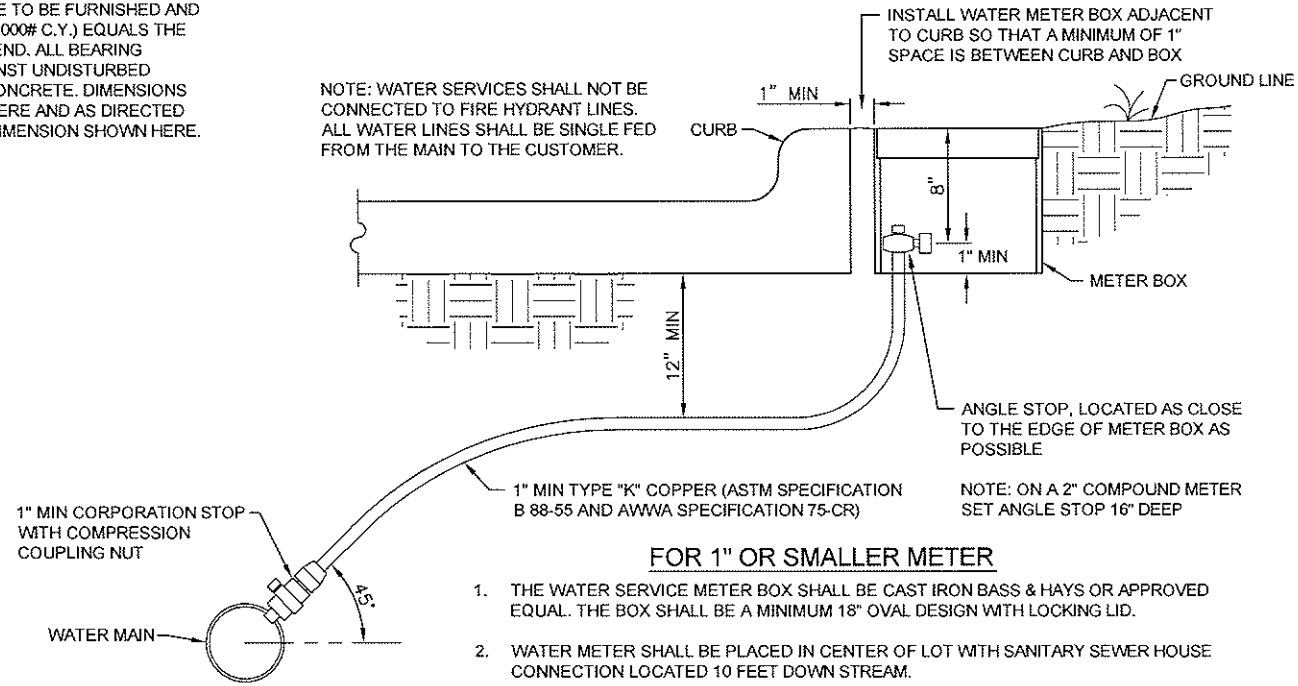

FOR 1" OR SMALLER METER

1. THE WATER SERVICE METER BOX SHALL BE CAST IRON BASS & HAYS OR APPROVED EQUAL. THE BOX SHALL BE A MINIMUM 18" OVAL DESIGN WITH LOCKING LID.
2. WATER METER SHALL BE PLACED IN CENTER OF LOT WITH SANITARY SEWER HOUSE CONNECTION LOCATED 10 FEET DOWN STREAM.
3. ALL SERVICE TAPS SHALL BE MADE AT 45° ANGLES TO CENTERLINE OF PIPE.

TYPICAL SERVICE CONNECTION WITH METER BOX

TYPE K COPPER SERVICE PIPE SOFT ANNEALED	SMITH BLAIR #317 DOUBLE STRAP SADDLE WITH C.C. THREADS	MUELLER CORPORATION STOP	MUELLER ANGLE STOP	BASS & HAYS CAST IRON METER BOX WITH LOCKING LID
1 INCH	1 INCH	B-25008	B-24258	85
2 INCH	2 INCH	B-25008	B-24276	55 A

NOTE:
1. FOR SERVICE LINES WITH SIZES DIFFERENT THAN SHOWN, SPECIFIC APPROVAL SHALL BE OBTAINED FROM THE CITY ENGINEER.
2. SET WATER METER SERVICES 5' UPHILL FROM CENTER OF EACH LOT. SEWER LINES SHALL BE 5' DOWN HILL FROM CENTER OF EACH LOT WITH A MINIMUM OF 10' BETWEEN WATER AND SEWER LINES.

CITY OF SACHSE, TEXAS
DEPARTMENT OF ENGINEERING

STANDARD CONSTRUCTION DETAILS
WATER DETAILS

DETAILS

APPROVED:

DATE: NOVEMBER 2008 | REVISED:

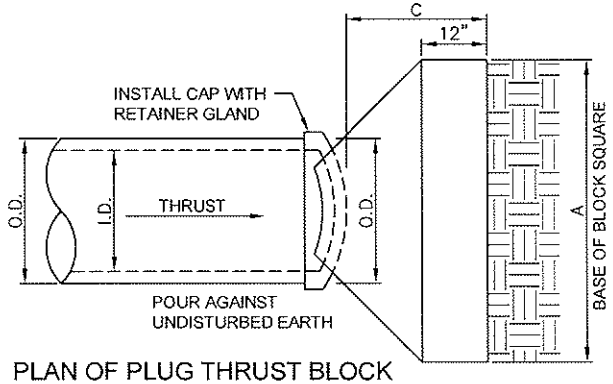

PLAN OF PLUG THRUST BLOCK

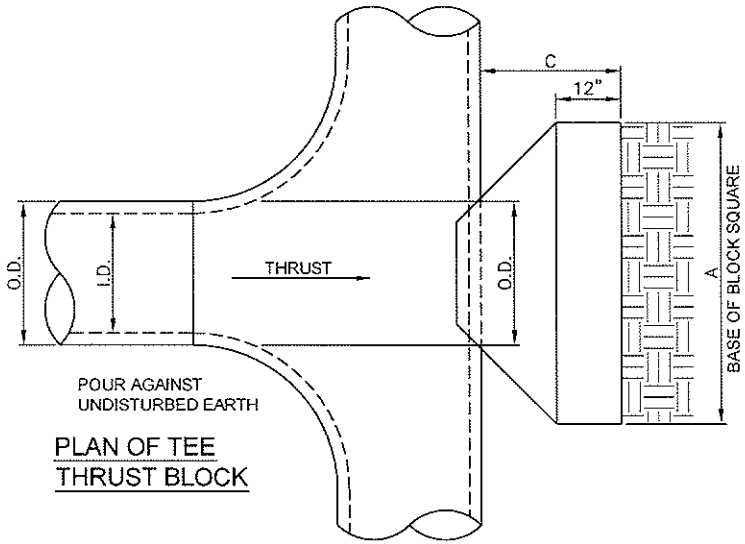

PLAN OF TEE
THRUST BLOCK

TYPICAL PLUG & TEE THRUST BLOCKS

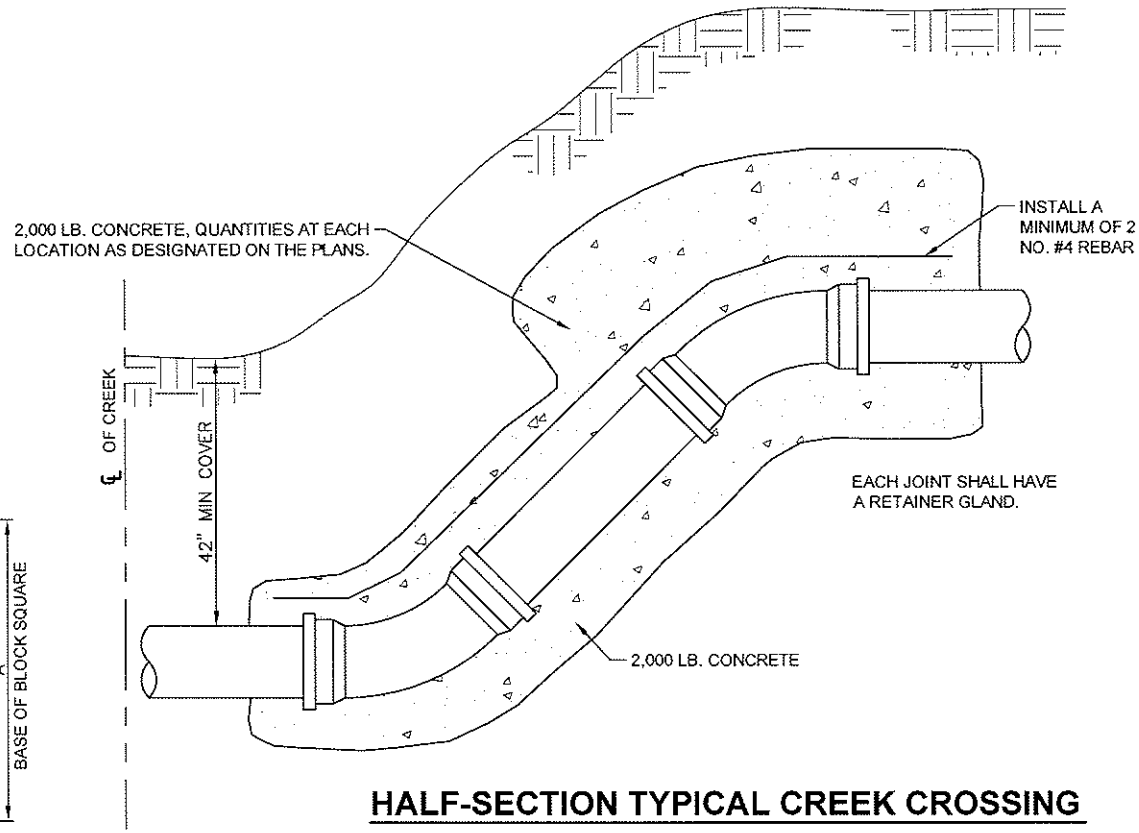

HALF-SECTION TYPICAL CREEK CROSSING

THRUST IN TONS FOR VERTICAL BENDS								
I.D. IN INCHES	ANGLE OF BEND							
	11.25°	15°	22.50°	30°	45°	60°	75°	90°
12	1.90	2.70	3.00	4.50	6.00	8.50	10.10	11.00
14	2.10	3.60	4.00	6.00	8.00	12.20	13.90	14.60
16	2.94	3.90	5.78	7.54	10.66	13.06	14.56	15.08
18	3.72	4.94	7.30	9.54	13.50	16.52	18.42	19.08
20	4.60	6.10	9.02	11.78	16.66	20.40	22.76	23.56
24	6.62	8.78	12.98	16.96	23.98	29.38	32.76	33.92
30	10.34	13.72	20.28	26.52	37.50	45.92	51.22	53.02

TEES & PLUGS			
I.D. IN INCHES	A FT	C FT	THRUST IN TONS
12	2.91	1.17	10.50
14	3.39	1.37	14.50
16	3.87	1.57	15.08
18	4.37	1.77	19.09
20	4.86	1.97	23.56
24	5.82	2.36	33.93
30	7.28	2.95	53.01

CITY OF SACHSE, TEXAS
DEPARTMENT OF ENGINEERING

STANDARD CONSTRUCTION DETAILS
WATER DETAILS

DETAILS

APPROVED:

DATE: NOVEMBER 2008 | REVISED:

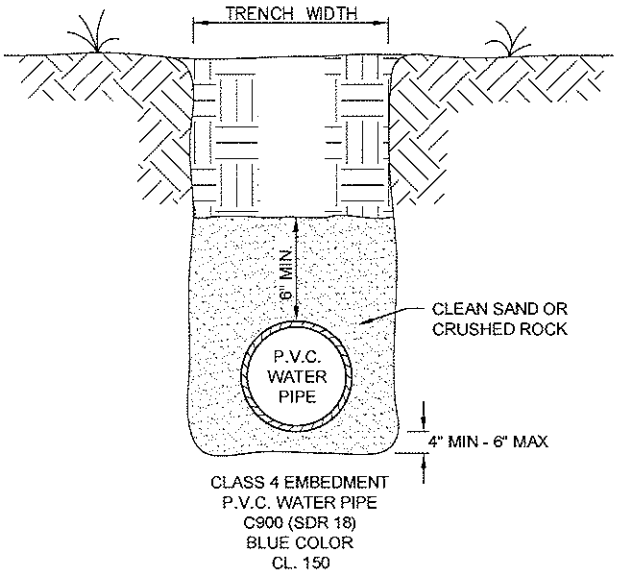

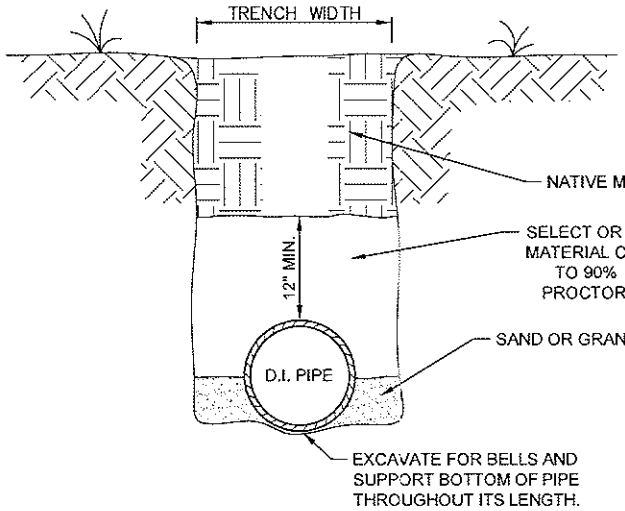

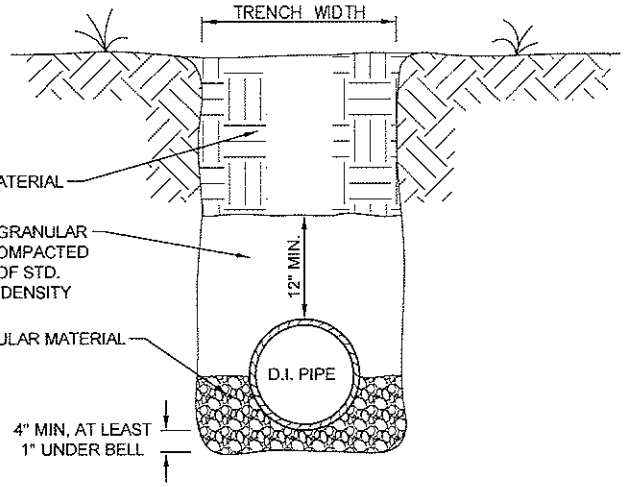

TYPICAL BACKFILL OF WATER MAIN

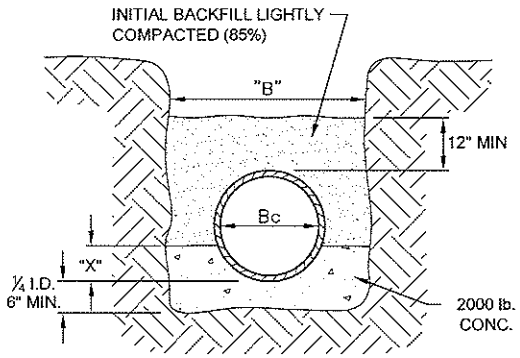

CONCRETE CRADLE

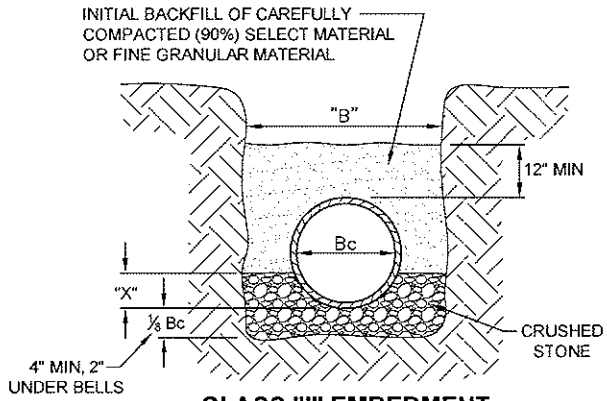

CLASS "I" EMBEDMENT

EMBEDMENT DETAILS

NOTE: CONCRETE ENCASEMENT SHALL BEGIN AND END 6 INCHES FROM THE END OF A JOINT

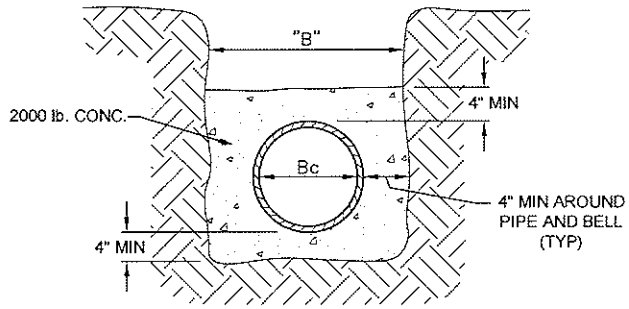

CONCRETE ENCASEMENT

TABLE OF QUANTITIES OF MATERIALS IN CUBIC YARDS PER 100 LINEAR FEET

INSIDE DIAMETER OF PIPE	APPROX. OUTSIDE DIAMETER OF PIPE	"X" IS A MINIMUM DEPTH	"B" TRENCH WIDTH FOR COMPUTATION OF QUANTITIES	CONCRETE		CRUSHED STONE FOR CLASS "I" EMBEDMENT
				FOR EMBEDMENT	FOR ENCASEMENT	
REINFORCED CONCRETE CYLINDER PIPE						
14"	17.25"	2.53"	34"	6.91	16.07	5.16
16"	19.38"	2.84"	36"	7.50	17.76	5.64
18"	21.78"	3.19"	38"	8.11	19.52	6.16
24"	27.75"	4.06"	44"	9.97	24.90	8.28

CITY OF SACHSE, TEXAS
DEPARTMENT OF ENGINEERING

STANDARD CONSTRUCTION DETAILS
WATER DETAILS

DETAILS

APPROVED:

DATE: NOVEMBER 2008 | REVISED:

Note:
Provide 1" minimum thickness concrete or cement mortar coating in the field for the protection of all exposed steel such as flanges, caulked joints, threaded outlets, closures, etc. The cement mortar used shall consist of one part Portland cement to two and one-half parts of fine, sharp (plaster) sand where shown. Coating is to be reinforced with wire mesh.

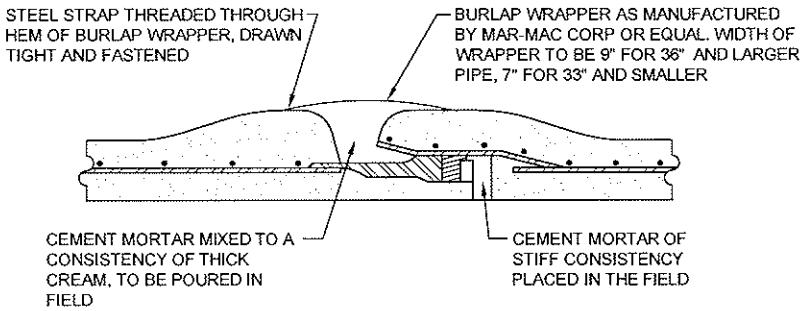

STANDARD RUBBER GASKET JOINT

NOTE: ALL CLOSURE SECTIONS SHALL BE FABRICATED WITH HAND HOLES TO ALLOW WIPING INSIDE OF JOINTS AFTER CLOSURE IS IN PLACE

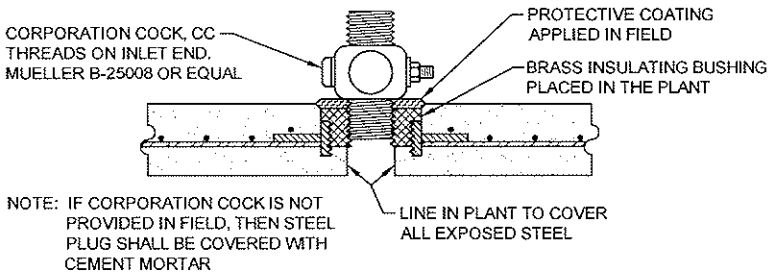

NOTE: IF CORPORATION COCK IS NOT PROVIDED IN FIELD, THEN STEEL PLUG SHALL BE COVERED WITH CEMENT MORTAR

THREADED CONNECTION

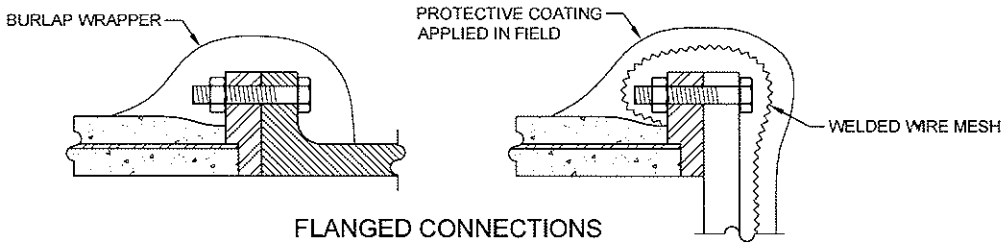

FLANGED CONNECTIONS

REINFORCED CONCRETE CYLINDER PIPE DETAILS

Note:
Any surface receiving a cement mortar coating shall be thoroughly clean and wetted with water just prior to placing the cement mortar coating. After placement, care shall be taken to prevent cement mortar coating from drying out too rapidly by covering with damp earth or burlap. Cement mortar coating shall not be applied during freezing weather.

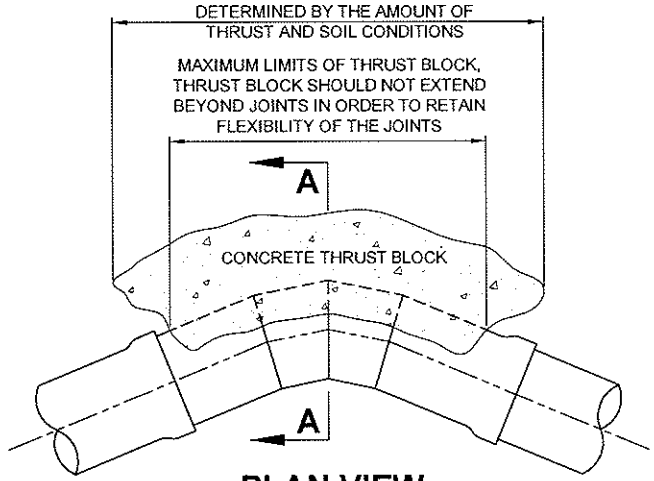

PLAN VIEW

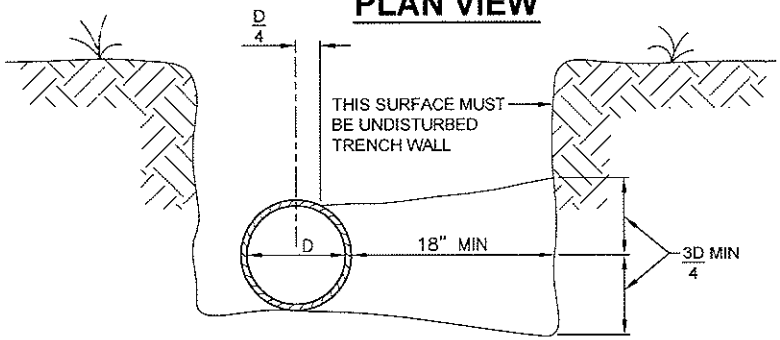

SECTION A-A

PROVIDE ADEQUATE BLOCKING AT TEES, WYES, BENDS, DEAD ENDS, ETC. TO COUNTERACT THE RESULTANT FORCE DUE TO INTERNAL PRESSURES

THRUST BLOCK DETAIL

CITY OF SACHSE, TEXAS DEPARTMENT OF ENGINEERING	
STANDARD CONSTRUCTION DETAILS WATER DETAILS	
DETAILS	
APPROVED:	
DATE: NOVEMBER 2008	REVISED:

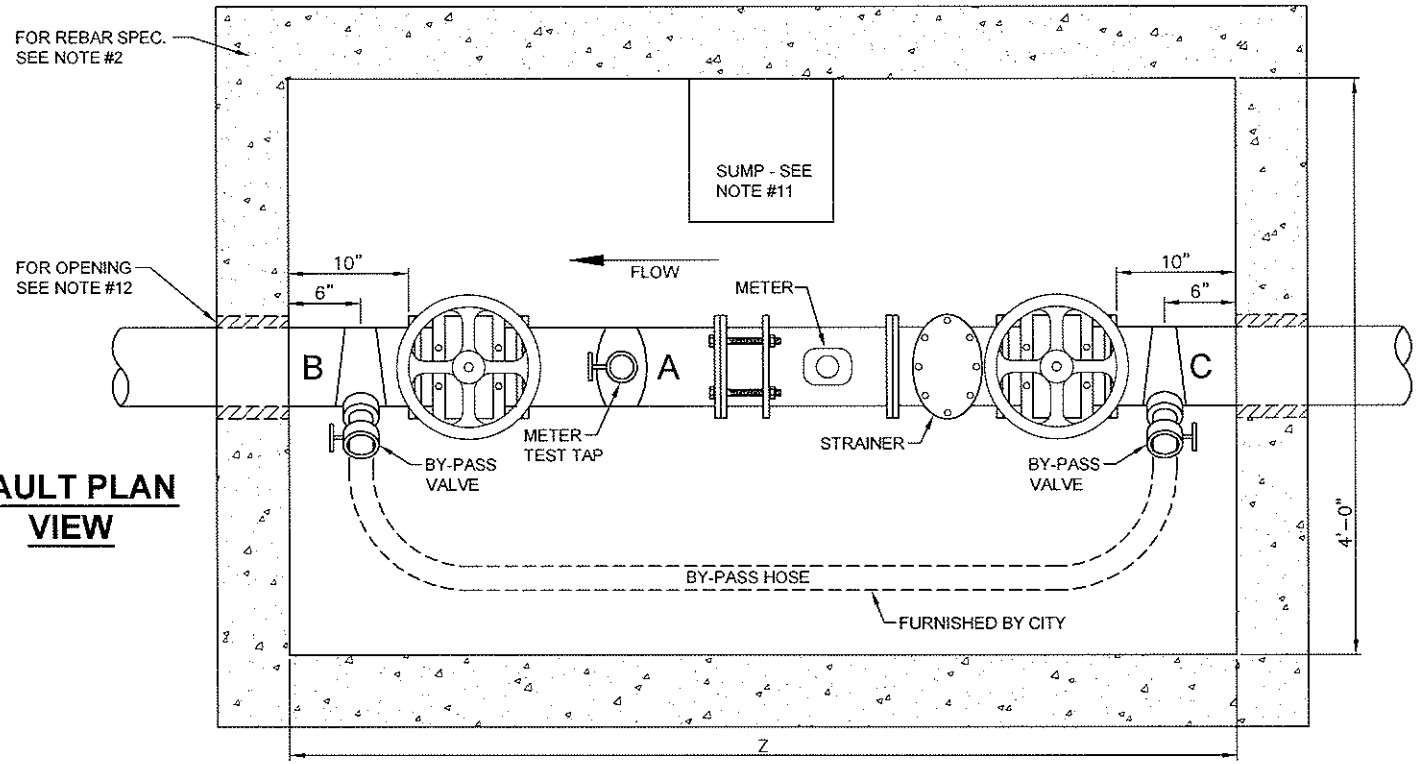

VAULT PLAN VIEW

METER VAULT & BY-PASS SPECIFICATIONS

1. Notify the Public Works Department (972-495-7600) prior to construction of vault or by-pass assembly.
2. The meter vault can be either poured in place or prefabricated. Concrete shall be 6" thick and be 3,000 P.S.I. reinforced with #4 steel bars on 12" centers each way if the vault is poured in place Prefabricated vaults shall be 4" thick and be 4,500 P.S.I. concrete with #4 steel bars on 8" centers. These are minimum specifications.
3. The vault will not be put in any drive or parking areas and must be located in a utility easement.
4. A drawing with the exact measurements of the meter vault and by-pass will be given to the contractor for a 3", 4" and 6" meter.
5. The vault lid shall be a Bilco Lid, Type Q-4 single leaf design. Angle frame is ¼" steel with strap anchors bolted to the exterior. The leaf is ¼" steel diamond pattern plate, pivoting on torsion bars for easy operation. The minimum live load capacity is 150 lbs. per square foot. The size of the lid is 3' by 3'.
6. The lid shall be painted with 43-38 Tnemec diffused aluminum paint or approved equal.
7. Contractor shall make 3 taps inside the vaults. Tap "A" must be at least two pipe diameters downstream of meter and must be 2". Taps "B" & "C" must be made at approximately 45° angle on each end of the piping before it intersects the wall. Smith Blair 317 nylon coat or approved equal service saddles, brass nipples and ball valves.
8. The strainer, meter and flexible coupling will be provided and installed by the City at the contractor's expense.
9. The strainer, meter and flexible coupling will not be set until the meter vault and taps are accepted by the City of Sachse Public Works Department.
10. The gate valves are required to be Mueller no. R-2360-6 flanged resilient seat gate valves.
11. The bottom of the meter vault must be 6" thick concrete with #4 steel bars on 12" centers both ways and have a 4" fill sand cushion underneath. A sump 4" deep and 12" in diameter shall be installed to one side of the center of the bottom slab. If a precast vault is to be used, a layer of Ram-Nek shall be installed between the walls and bottom.
12. The contractor shall have a choice of either having a Link-Seal wall sleeve model WE-8-32-5-6 for a 4" pipe, WS-1036-5-6 for 6" or WS-12-37-5-6 for 8" pipe, cast in the vault or have the vault wall cored before installation of vault and piping. In either case, a Link-Seal model no. LB-400-C must be used to seal the annular space between the pipe and wall opening. Breaking of the wall with a jackhammer is not permitted.
13. There will be a concrete support under each valve.
14. Depth of vault shall be a minimum of 4'-6".

DIMENSION FOR 3", 4" & 6" D.C.V.

	METER VAULT SIZES		
DIMENSION	3"	4"	6
V	8"	9"	10.5"
W	15"	20"	18"
X	20"	23"	27"
Y	9"	9"	12"
Z	6'-1"	7'-0"	7'-5"

CITY OF SACHSE, TEXAS
DEPARTMENT OF ENGINEERING

STANDARD CONSTRUCTION DETAILS
WATER DETAILS

DETAILS

APPROVED:

DATE: NOVEMBER 2008 | REVISED:

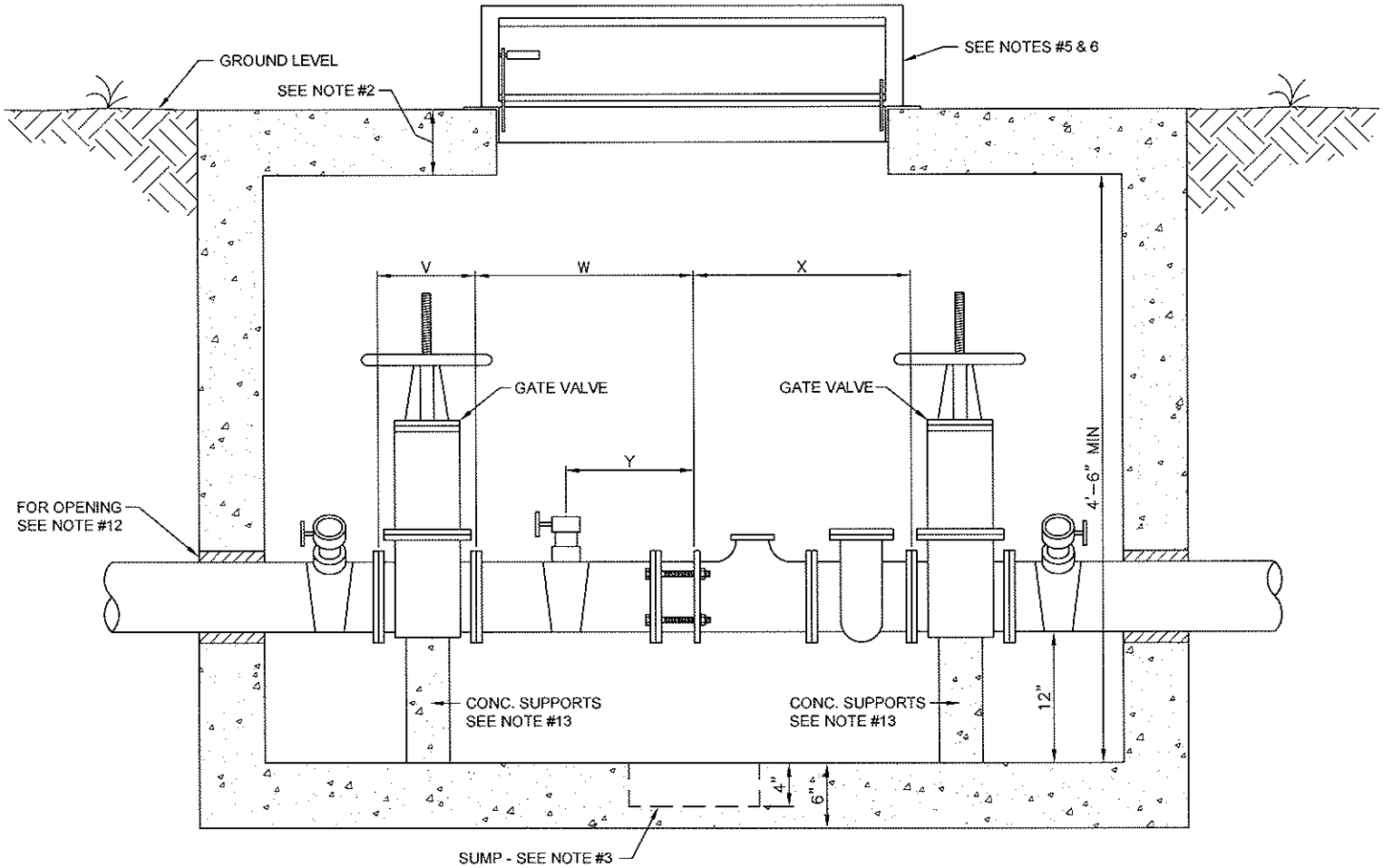

VAULT SECTION VIEW

CITY OF SACHSE, TEXAS DEPARTMENT OF ENGINEERING	
STANDARD CONSTRUCTION DETAILS WATER DETAILS	
DETAILS	
APPROVED:	
DATE: NOVEMBER 2008	REVISED:

DIMENSION FOR 4", 6" & 8" D.C.V.

	CHECK VAULT SIZES		
DIMENSION	4"	6"	8"
X	4'-7"	5'-4"	5'-8"

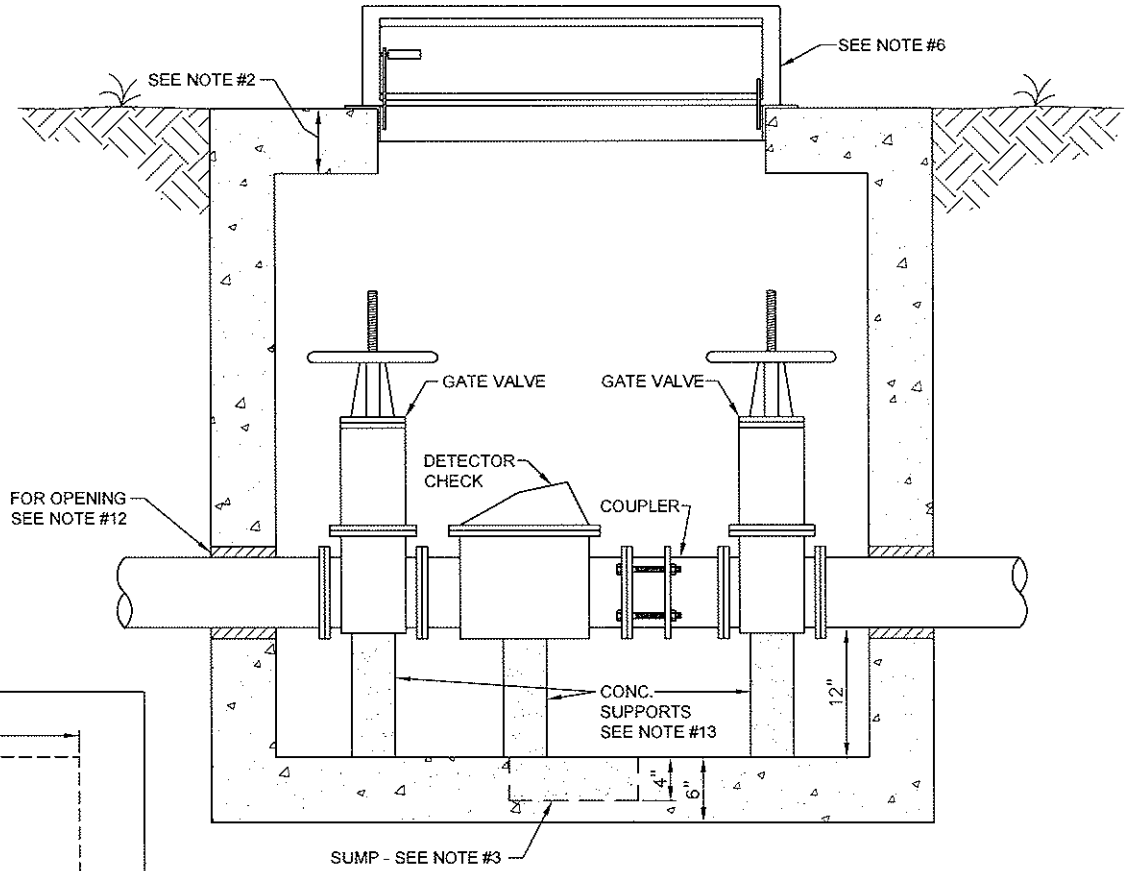

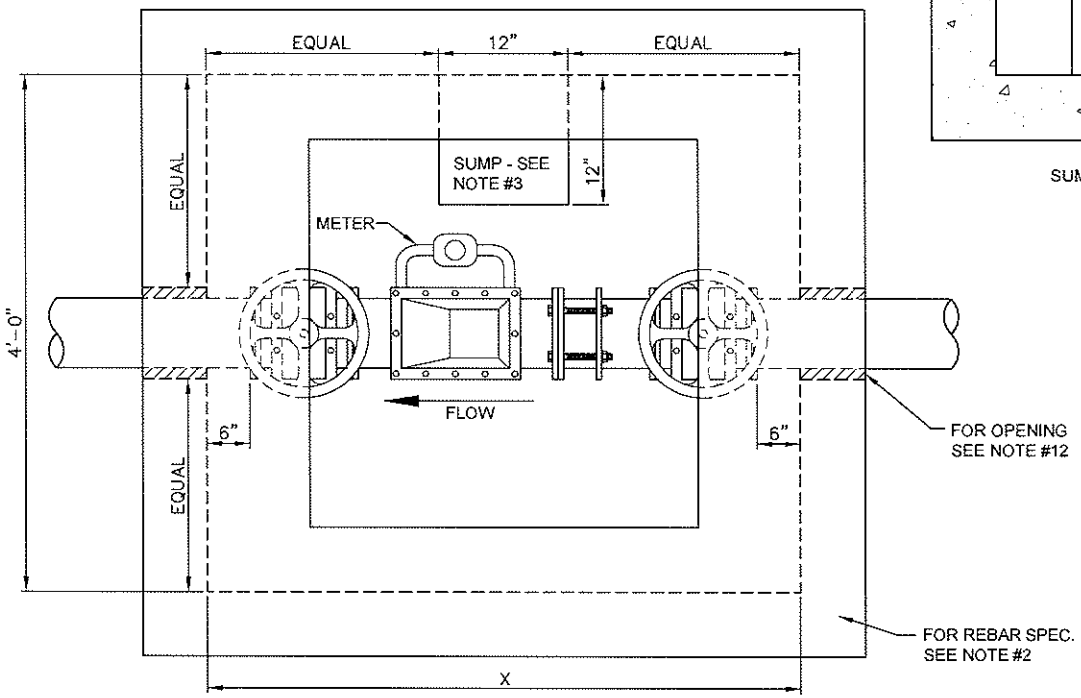

DETECTOR CHECK VAULT

CITY OF SACHSE, TEXAS DEPARTMENT OF ENGINEERING
STANDARD CONSTRUCTION DETAILS WATER DETAILS
DETAILS
APPROVED:
DATE: NOVEMBER 2008 | REVISED:

DETECTOR CHECK VAULT NOTES

1. Notify the Public Works Department (972-495-7600) prior to construction of vault or by-pass assembly.
2. The vault can be either poured in place or prefabricated. Concrete shall be 6" thick and be 3,000 P.S.I. reinforced with #4 steel bars on 12" centers each way if the vault is poured in place. Prefabricated vaults shall be 4" thick and be 4,500 P.S.I. concrete with #4 steel bars on 8" centers. These are minimum specifications.
3. The bottom of the vault shall be 6" thick concrete with #4 steel bars on 12" centers both ways. A sump 4" deep and 12" in diameter shall be installed to one side in the center of the bottom slab. A 4" fill sand cushion shall be installed under the slab. If a precast vault is to be used, a layer of Ram-Nek shall be installed between the walls and bottom.
4. The vault will not be put in any drive or parking areas and must be located in a utility easement.
5. A drawing with the exact measurements of the vault shall be given for the detector check assembly.
6. The vault lid shall be a Bilco Lid, Type Q-4 single leaf design. Angle frame is ¼" steel with strap anchors bolted to the exterior. The leaf is ¼" steel diamond pattern plate, pivoting on torsion bars for easy operation. The minimum live load capacity is 150 lbs. per square foot. The size of the lid is 3' by 3'.
7. The lid shall be painted with 43-38 Tnemec diffused aluminum paint or approved equal.
8. All piping inside the vault shall be ductile iron with flanged fittings.
9. The detector check shall be an Ames Series 3000SS (or approved equal) with a red painted exterior, equipped with a bypass meter. The meter will be furnished by the City at the contractor's expense. A Smith Blair flanged adapter coupling will also be furnished by the City at the contractor's expense.
10. The gate valves shall be Mueller no. R-2360-6. Outside stem and yoke shall have an Underwriter's Laboratory listing.
11. All piping inside the vault and the vault itself shall have to be approved by the City of Sachse, Public Works Department.
12. The contractor shall have a choice of either having a Link-Seal wall sleeve model WE-8-32-5-6 for a 4" pipe, WS-1036-5-6 for 6" or WS-12-37-5-6 for 8" pipe, cast in the vault or have the vault wall cored before installation of vault and piping. In either case, a Link-Seal model no. LB-400-C must be used to seal the annular space between the pipe and wall opening. Breaking of the wall with a jackhammer is not permitted.
13. There will be a concrete support under each valve and under the detector check.
14. Depth of vault shall be a minimum of 4'-6".

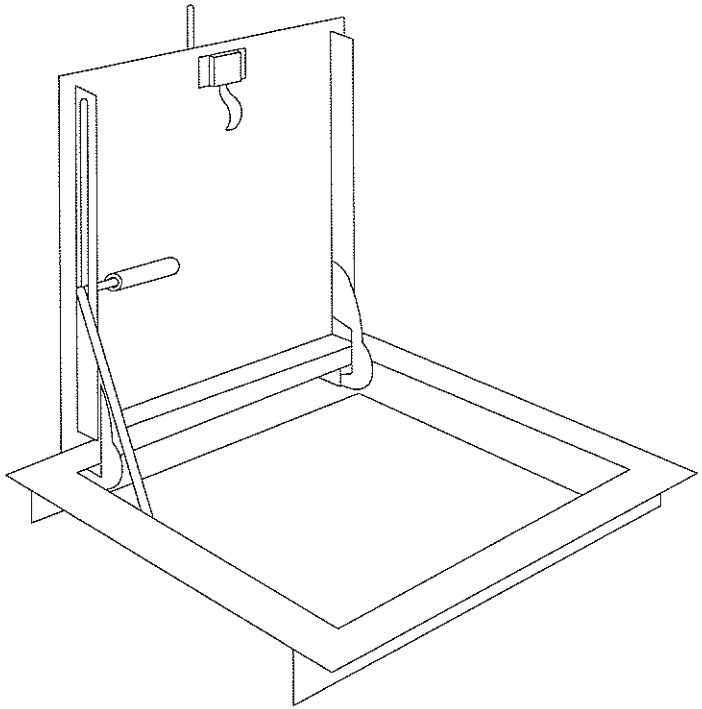

BILCO LID

GENERAL NOTES

1. All water lines shall be rubber gasket pipe only.
2. All cast iron fittings shall be mechanical joint for pvc water pipe.
3. All water mains shall have the following minimum cover or sufficient cover to clear other utilities:
   6" and 8" pipe - 42" cover
   12" pipe - 48" cover
4. Fire hydrants shall be placed on same side of the street with water main, when possible. The location is to be between the back of curb and the sidewalk area. Locking pipe fitting shall be used to form a connected unit.

CITY OF SACHSE, TEXAS DEPARTMENT OF ENGINEERING		
STANDARD CONSTRUCTION DETAILS WATER DETAILS		
DETAILS		
APPROVED:		
DATE: NOVEMBER 2008	REVISED:	Page 9

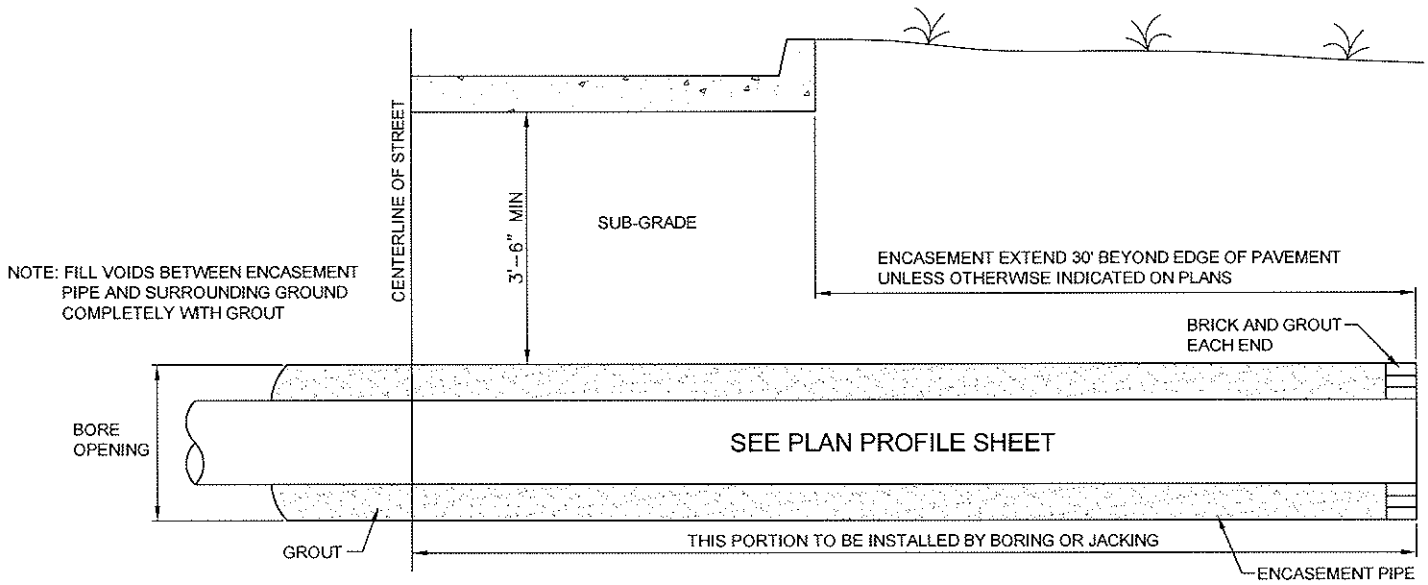

HALF-SECTION OF TYPICAL HIGHWAY CROSSING

NOTE: ENCASEMENT PIPE MAY BE ELIMINATED FOR CITY STREETS PROVIDED PIPE IS DUCTILE IRON

SPECIFICATIONS FOR POLYVINYL CHLORIDE (PVC) WATER PIPE

UNPLASTICIZED POLYVINYL CHLORIDE (PVC) WATER PIPE SHALL MEET OR EXCEED REQUIREMENTS OF AWWA C900 PVC PIPE WITH CAST IRON OUTSIDE DIMENSIONS. PIPE SHALL BE LISTED BY UNDERWRITER LABORATORIES AND SHALL BE APPROVED FOR USE IN CITIES AND TOWNS OF THE STATE OF TEXAS BY THE STATE BOARD OF INSURANCE.

PVC WATER PIPE SHALL BE FURNISHED WITH A RUBBER RING AT EACH JOINT AND IN INTEGRAL THICKENED BELL AS A PART OF EACH JOINT. THE PIPE CLASS SHALL BE A MINIMUM CLASS 150 DR 18 FOR 8 INCH AND LARGER PIPE, WHICH REFERS TO THE MAXIMUM HYDROSTATIC PRESSURE IN NORMAL OPERATIONS. LAYING LENGTHS SHALL BE 20 FEET +/- INCH. PIPE AND FITTINGS MUST BE ASSEMBLED WITH A NONTOXIC LUBRICANT.

FITTINGS FOR PVC WATER PIPE SHALL BE GRAY IRON OR DUCTILE IRON AND AMERICAN MADE. MECHANICAL JOINT TYPE FITTING WITH RETAINER JOINT GLANDS SHALL BE CLASS 150 IN ACCORDANCE WITH AWWA C110-77 OR C-111-80, OR LATEST REVISION.

UNLESS OTHERWISE SPECIFIED ON PLANS OR SHOWN IN PROFILES, PVC WATER PIPE SHALL BE INSTALLED TO CLEAR ALL UTILITY LINES AND SHALL HAVE THE FOLLOWING MINIMUM COVER BELOW THE LOWEST PROPERTY LINE GRADE ON THE STREET

6" & 8" PIPE - 42" COVER
12" PIPE - 48" COVER

NORMAL SIZE	PIPE DIMENSIONS OD	DR 18 MIN. WALL THICKNESS
6	6.90	0.383
8	9.05	0.503
10	11.10	0.617
12	13.20	1.733

ROCKWELL 317 NYLON COATED DOUBLE STRAP STAINLESS STEEL SADDLES SHALL BE USED FOR MAKING 2" OR SMALLER TAPS.

MINIMUM PIPE DIAMETER IS TO BE 6" ON ALL PIPE.

NOTE: FOR WATER PIPES OVER 12" IN DIAMETER, SPECIFIC APPROVAL, SPECIFICATIONS AND PRESSURE CLASS SHALL BE MADE BY THE CITY PRIOR TO ITS USE IN THE SYSTEM.

NO DIRECT TAPPING WILL BE ALLOWED ON SEWER LINES. ALL SEWER SERVICES SHALL BE PROVIDED AND MADE WITH A SADDLE.

ALL WATER LINES SHALL BE BLUE IN COLOR.
ALL SEWER LINES SHALL BE GREEN IN COLOR.

CITY OF SACHSE, TEXAS
DEPARTMENT OF ENGINEERING

STANDARD CONSTRUCTION DETAILS
WATER DETAILS

DETAILS

APPROVED:

DATE: NOVEMBER 2008 | REVISED:

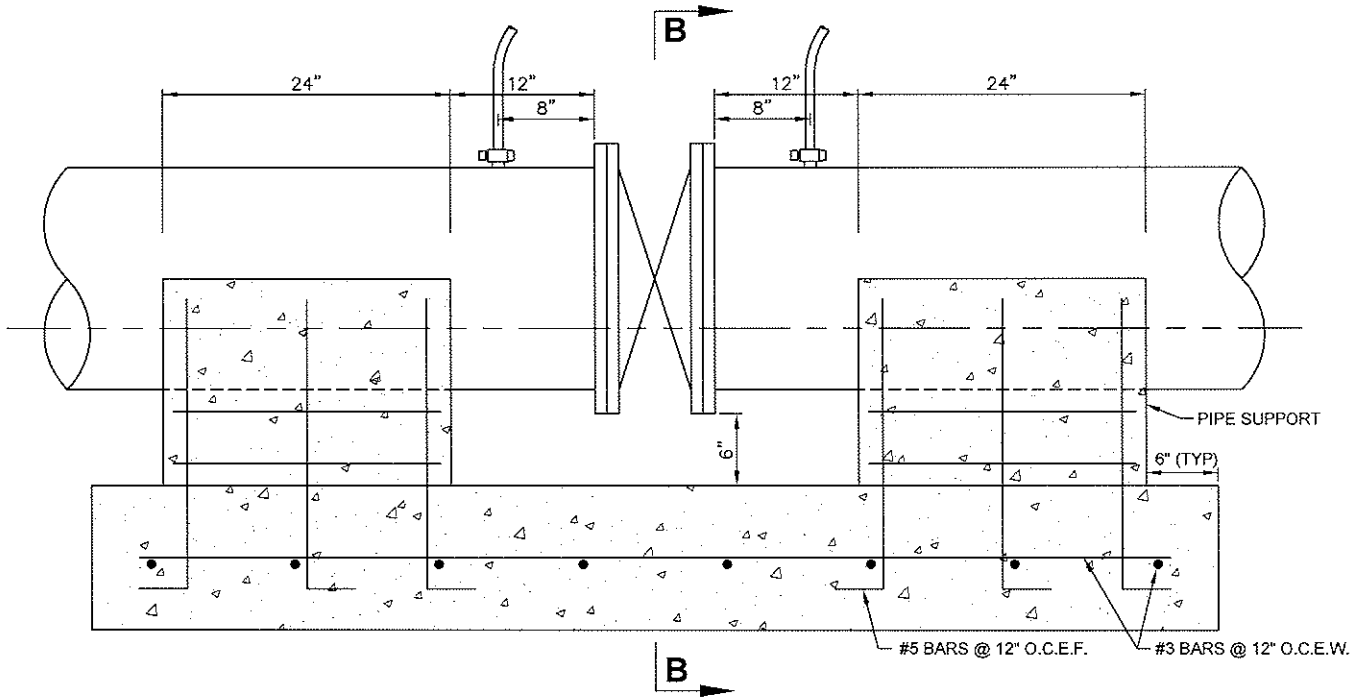

SECTION A-A

BUTTERFLY VALVE DETAIL

CITY OF SACHSE, TEXAS DEPARTMENT OF ENGINEERING		
STANDARD CONSTRUCTION DETAILS WATER DETAILS		
DETAILS		
APPROVED:		
DATE: NOVEMBER 2008	REVISED:	Page 11

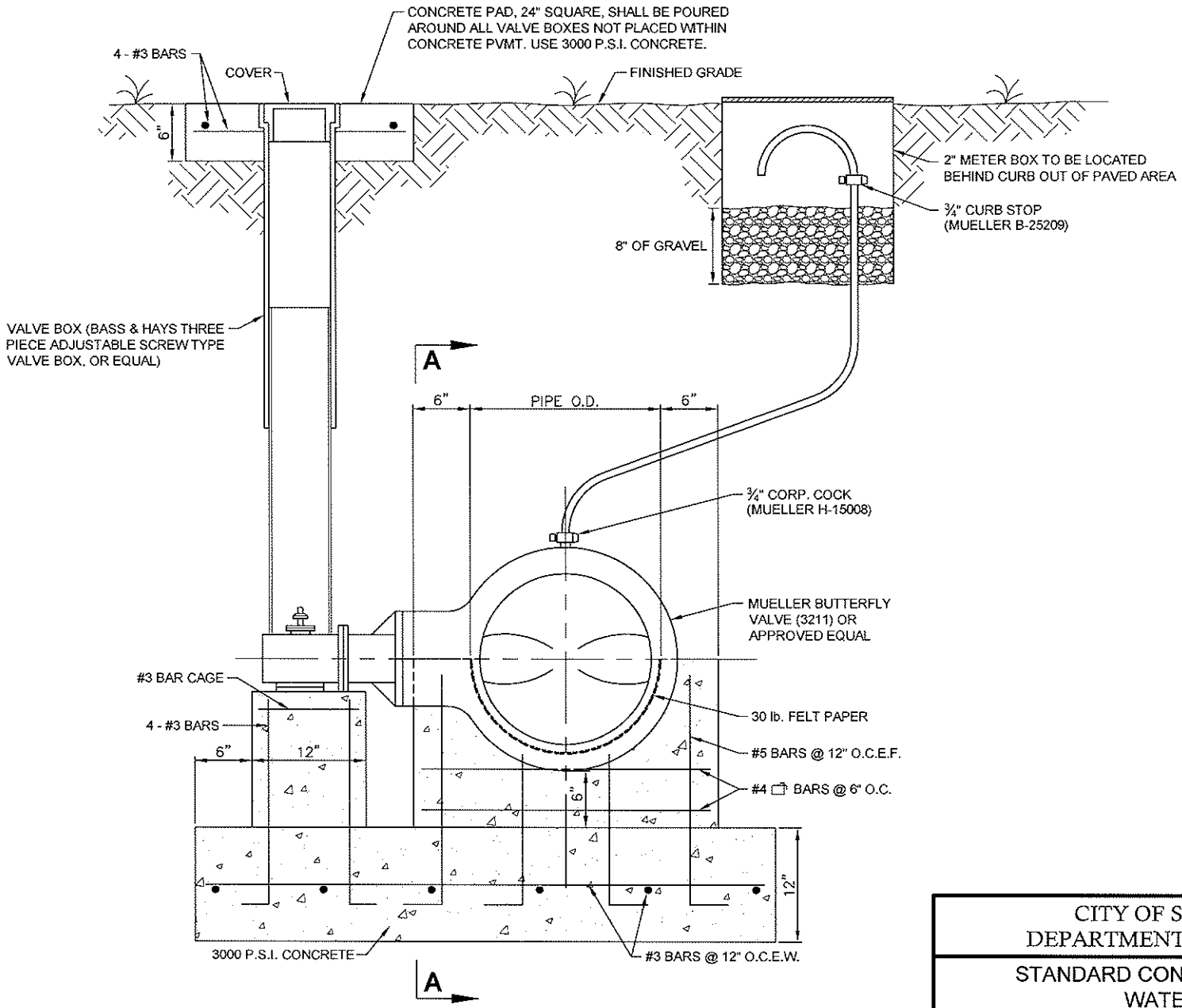

SECTION B-B

BUTTERFLY VALVE DETAIL

CITY OF SACHSE, TEXAS DEPARTMENT OF ENGINEERING		
STANDARD CONSTRUCTION DETAILS WATER DETAILS		
DETAILS		
APPROVED:		
DATE: NOVEMBER 2008	REVISED:	Page 12

SECTION 6
MISCELLANEOUS DETAILS

INDEX

CONTENTS	SECTION
SCREENING WALLS	6-A
CULVERT RAILS	6-B
HEADWALL DETAILS	6-C
CONSTRUCTION SIGN & BARRICADES	6-D
OTHER	6-E

SECTION 6-A
SCREENING WALLS

CITY OF SACHSE, TEXAS DEPARTMENT OF ENGINEERING		
STANDARD CONSTRUCTION DETAILS MISCELLANEOUS DETAILS		
SCREENING WALLS		
APPROVED:		
DATE: NOVEMBER 2008	REVISED:	Page 1

GENERAL NOTES - CONCRETE FENCES

1. CONCRETE - NORMAL WEIGHT, 3000 P.S.I. AT 28 DAYS.
2. REINFORCEMENT - ASTM A 615 - GR.60
3. MASONRY - COMPRESSIVE STRENGTH OF 2000 P.S.I., fm = 900 P.S.I.
4. WIND LOAD - 20 P.S.F.
5. PIER BEARING STRESSES - SEE BRICK SCREENING WALL NOTES.
6. MORTAR - TYPE S, 1800 P.S.I.
7. PROVIDE CONTROL JOINTS AT 50 FT.
8. PROVIDE EXPANSION JOINTS AT 200 FT. ON CENTER MAXIMUM.
9. WHERE THERE IS NO ALLEY PVMT., PROVIDE MIN. 9 FT. USUAL LENGTH PIER 6 FT. MIN. WITH 2 FT. MIN. INTO ROCK. THIS APPLIES TO BOTH REINFORCED CONCRETE SCREENING WALL AND BRICK SCREENING WALL.
10. ALL EXPOSED CONCRETE SHALL HAVE FINISHED SURFACE.
11. EXPANSION JOINT MATERIAL SHALL BE CELLU-JOINT OR EQUAL.

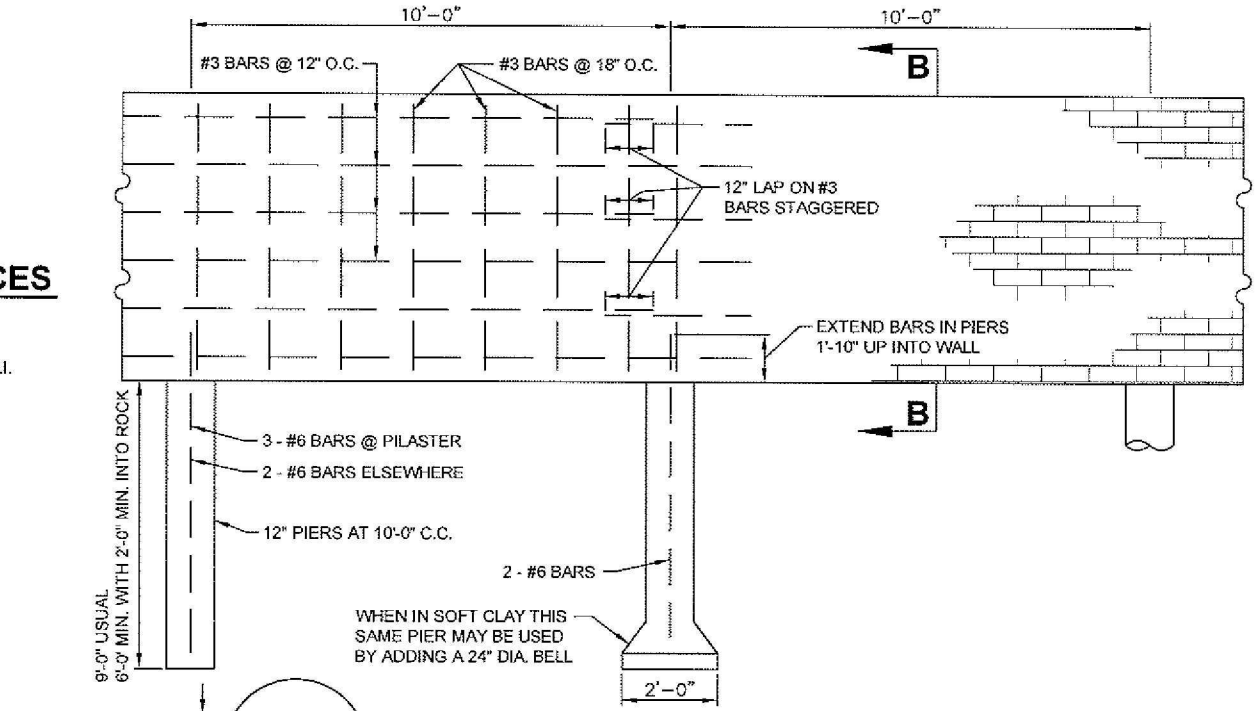

ELEVATION OF WALL IN ROCK
ALTERNATE FOR SOFT CLAY

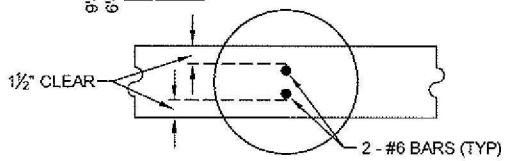

COLUMN SECTION

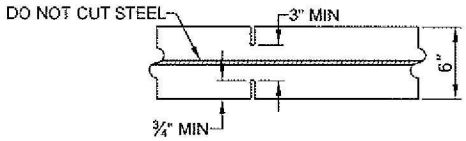

CONTRACTION JT
EVERY 20'-0"

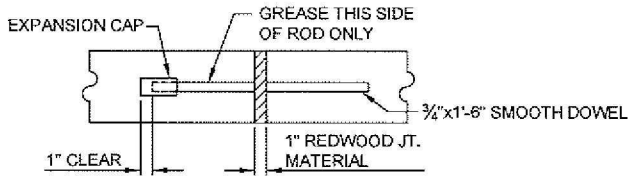

EXPANSION JT
EVERY 200'-0"
CENTER OVER PIER

REINFORCED CONCRETE SCREENING WALL

CITY OF SACHSE, TEXAS DEPARTMENT OF ENGINEERING		
STANDARD CONSTRUCTION DETAILS MISCELLANEOUS DETAILS		
SCREENING WALLS		
APPROVED:		
DATE: NOVEMBER 2008	REVISED:	Page 2

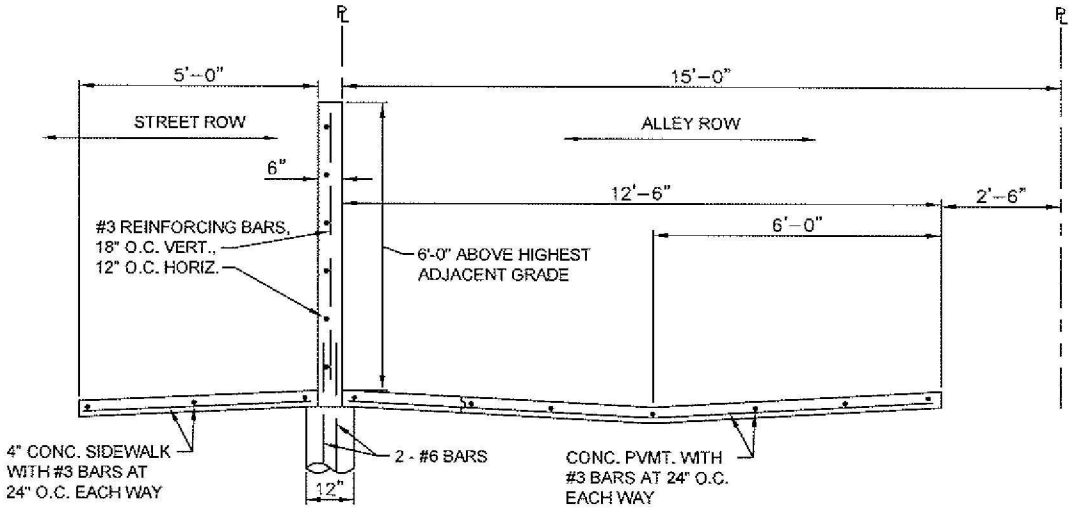

SECTION B-B, SEE SPECIAL DETAIL

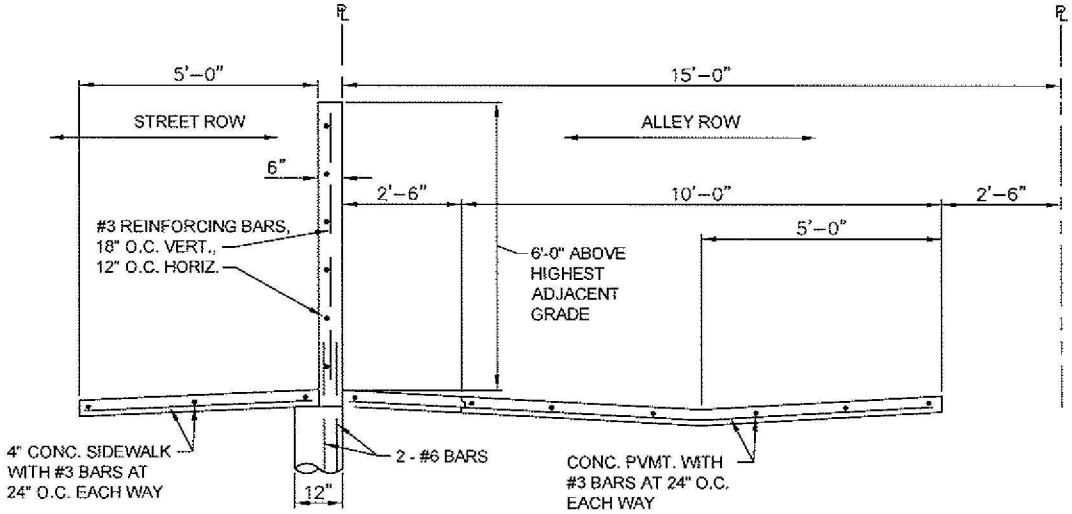

SECTION B-B, ALTERNATE

NOTE: PIERS REQUIRE
1 BLOCK-OUT OF ALLEY PAVING
2 POUR BEFORE ALLEY PAVING
OR
3 SAW CUT AFTER ALLEY PAVING UNLESS CONSTRUCTED PER SECTION B-B

REINFORCED CONCRETE SCREENING WALL

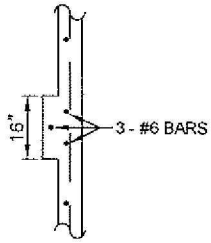

PLAN

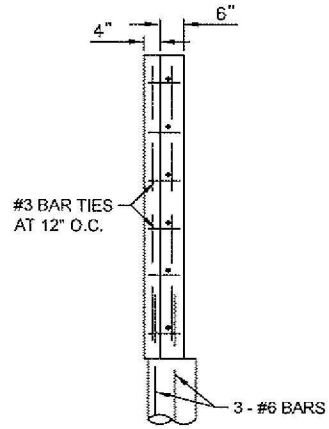

ELEVATION

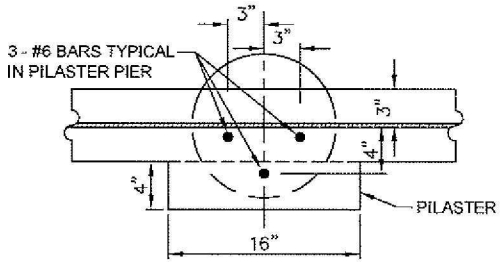

PIER DETAIL

PILASTERS EVERY 40'-0"

CITY OF SACHSE, TEXAS DEPARTMENT OF ENGINEERING
STANDARD CONSTRUCTION DETAILS MISCELLANEOUS DETAILS
SCREENING WALLS
APPROVED:
DATE: NOVEMBER 2008 | REVISED: | Page 3

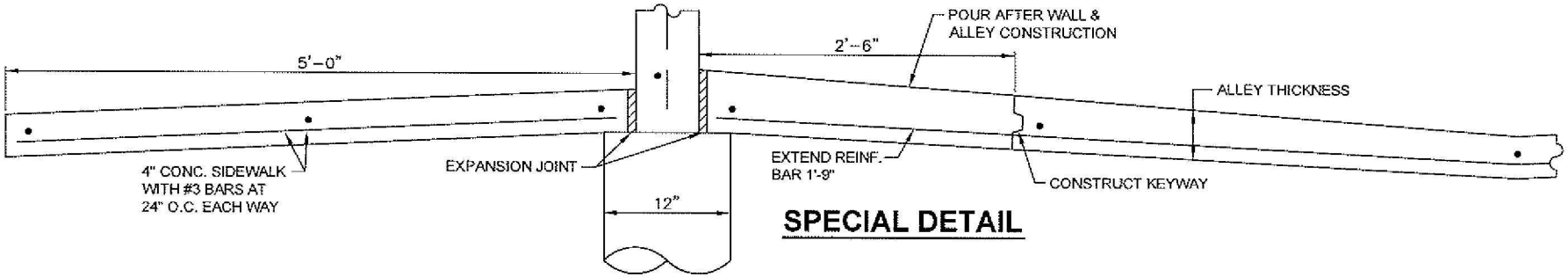

SPECIAL DETAIL

REINFORCED CONCRETE SCREENING WALL

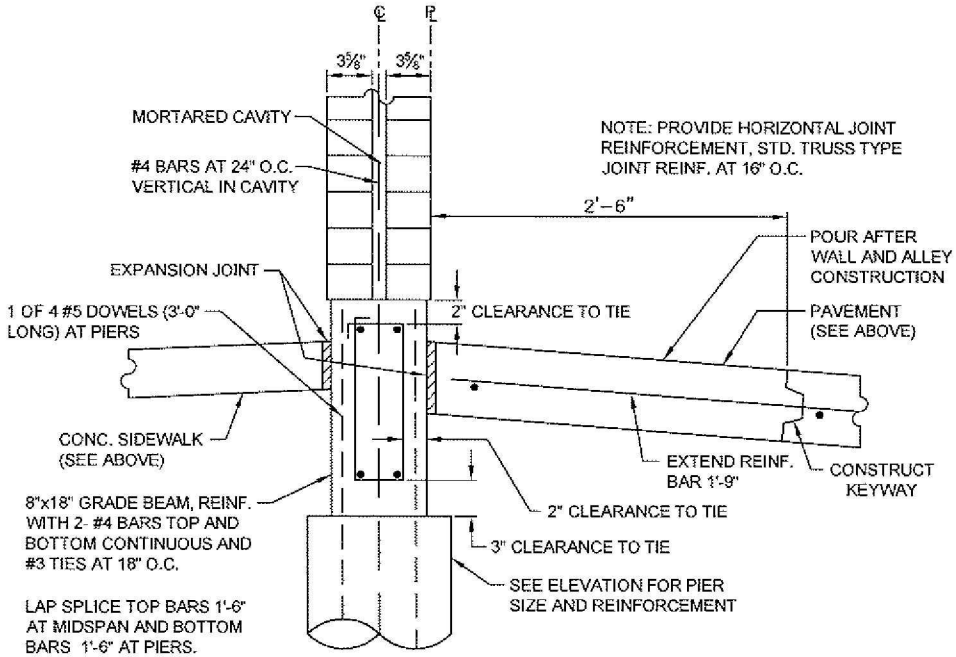

SECTION A-A

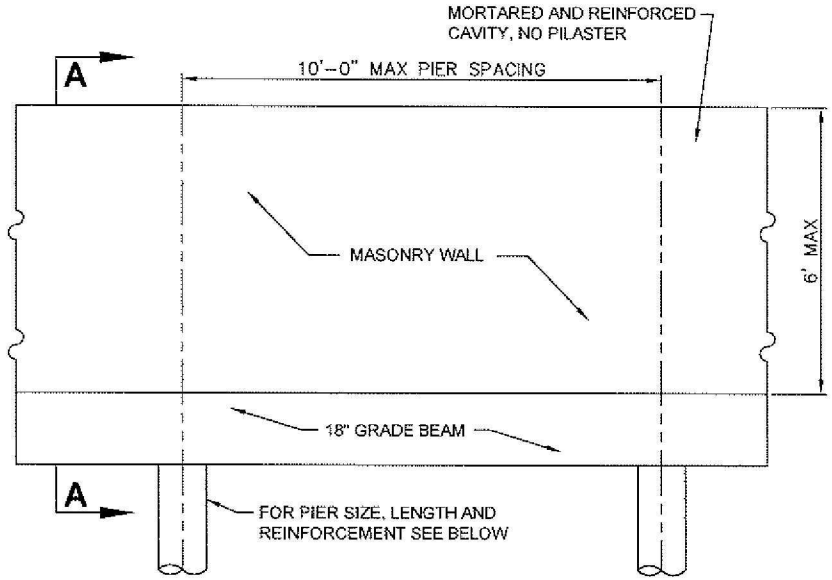

ELEVATION

BRICK SCREENING WALL

DRILLED PIERS - 12" DIAMETER WITH 4 - #4 RODS VERTICAL AND #4 ROD TIES AT 24" O.C. MINIMUM LENGTH OF PIER IS 6'-0". PIER BOTTOM MAY BE EITHER OF THE TWO ALTERNATES:

1 12" DIAMETER STRAIGHT SHAFT EMBEDDED A MINIMUM OF 2'-0" INTO ROCK. RESULTING BEARING STRESS IS 8.0 KIPS PER SQUARE FOOT.

2 12" DIAMETER SHAFT WITH A 24" DIAMETER BELL IN CLAY. RESULTING BEARING STRESS IS 2.0 KIPS PER SQUARE FOOT.

* SEE GENERAL NOTE NO. 9

CITY OF SACHSE, TEXAS DEPARTMENT OF ENGINEERING		
STANDARD CONSTRUCTION DETAILS MISCELLANEOUS DETAILS		
SCREENING WALLS		
APPROVED:		
DATE: NOVEMBER 2008	REVISED:	Page 4

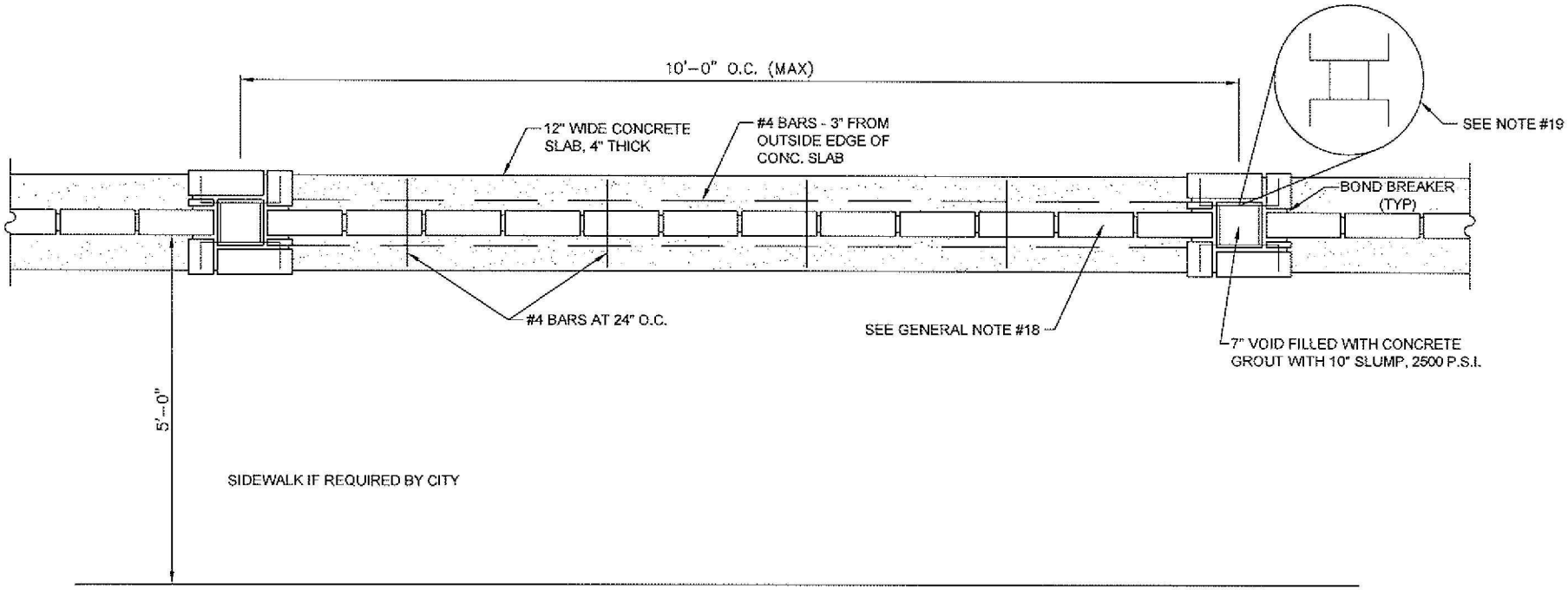

TYPICAL WALL & COLUMN LAYOUT PLAN

GENERAL NOTES - BRICK FENCES

12 CONCRETE SHALL HAVE A MINIMUM COMPRESSIVE STRENGTH OF 4000 P.S.I. AT 28 DAYS.
13 REINFORCING STEEL SHALL BE NEW BILLET CONFORMING TO THE REQUIREMENTS OF ASTM A 615 - GR.60.
14 CONCRETE FOR DRILLED PIERS SHALL BE PLACED WITHIN 8 HOURS OF DRILLING PIER HOLES.
15 BRICK MASONRY SHALL HAVE A MINIMUM COMPRESSIVE STRENGTH OF 5000 P.S.I. WITHOUT INSPECTION AND 3000 P.S.I. WITH INSPECTION.
16 MORTAR SHALL BE TYPE S.
17 CONSTRUCTION SHALL BE IN ACCORDANCE WITH THE REQUIREMENTS OF THE RECOMMENDED PRACTICE FOR ENGINEERED BRICK MASONRY - BRICK INSTITUTE OF AMERICA.
18 USE #9 GAUGE 1¾" WIDE GALVANIZED LADUR WIRE TO EXTEND HORIZONTAL IN WALL PANEL (DUR-O-WALL CORP) EVERY COURSE.
19 USE #9 GAUGE WIRE FABRICATED AS SHOWN BETWEEN EACH COURSE OF COLUMN BRICK.
20 THE DESIGN FOR THE FOUNDATION SUPPORTING PIERS SHALL TAKE INTO CONSIDERATION THE EXISTING SOIL STRUCTURE AND SUPPORTING BEARING STRENGTH.
21 CLEAN BOTTOM OF HOLE PRIOR TO PLACEMENT OF CONCRETE
22 DESIGN WIND PRESSURE - 20 P.S.F.
23 MAXIMUM PILASTER SPACING - 10'-0"
24 MAXIMUM HEIGHT OF WALL - 6'-0"
25 EXTEND REBAR 48" INTO PILASTER.

CITY OF SACHSE, TEXAS DEPARTMENT OF ENGINEERING		
STANDARD CONSTRUCTION DETAILS MISCELLANEOUS DETAILS		
SCREENING WALLS		
APPROVED:		
DATE: NOVEMBER 2008	REVISED:	Page 5

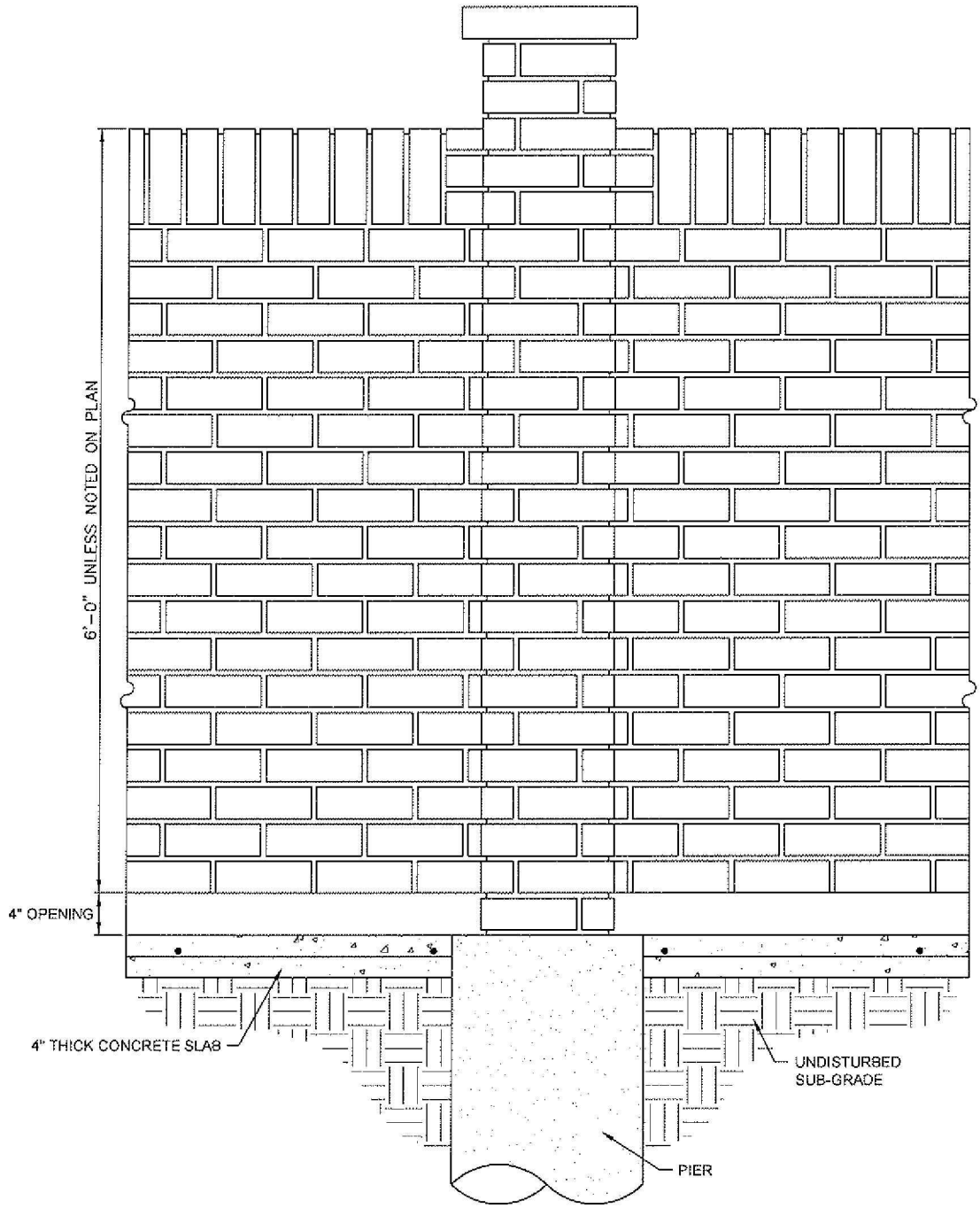

CITY OF SACHSE, TEXAS DEPARTMENT OF ENGINEERING		
STANDARD CONSTRUCTION DETAILS MISCELLANEOUS DETAILS		
SCREENING WALLS		
APPROVED:		
DATE: NOVEMBER 2008	REVISED:	Page 6

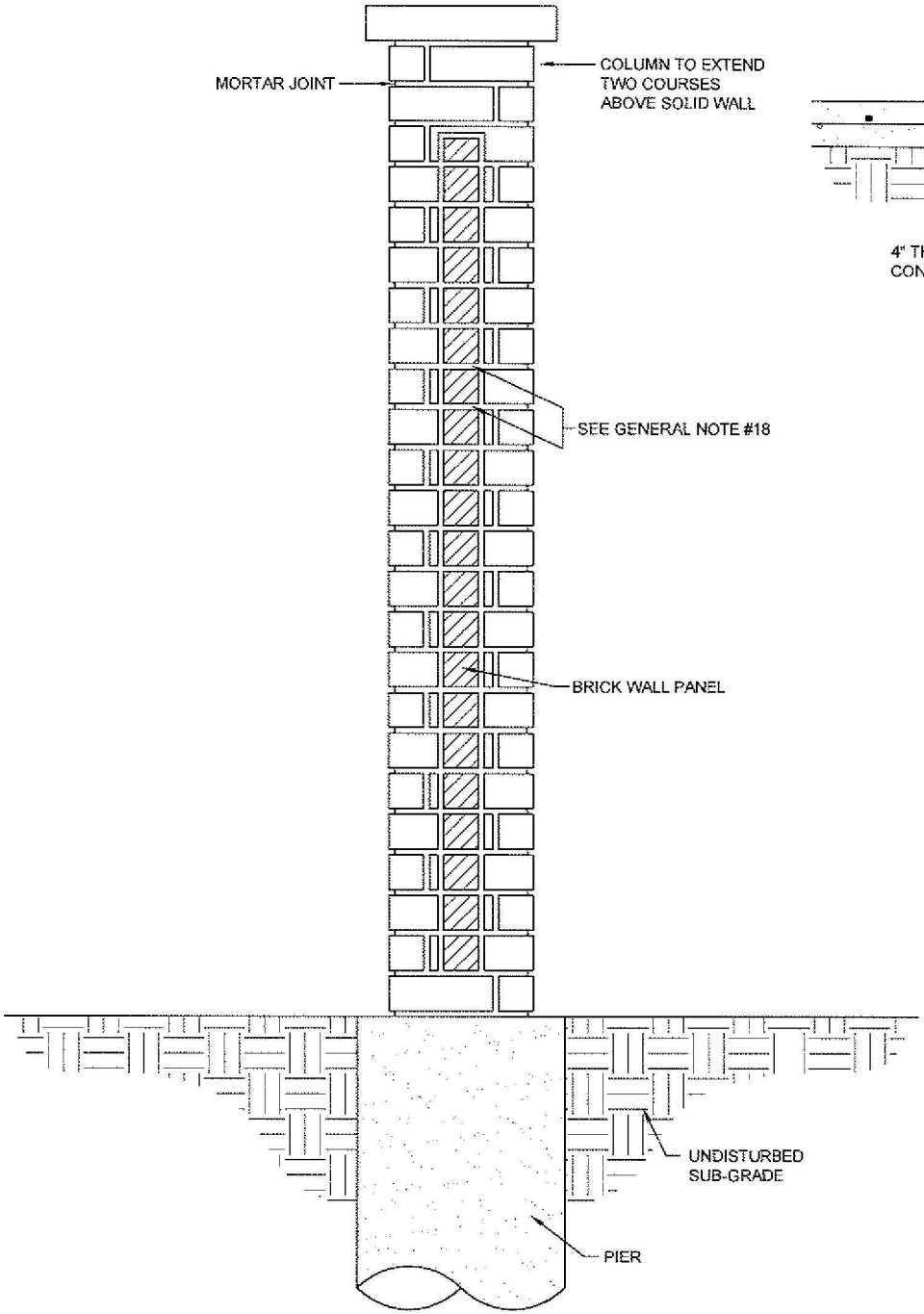

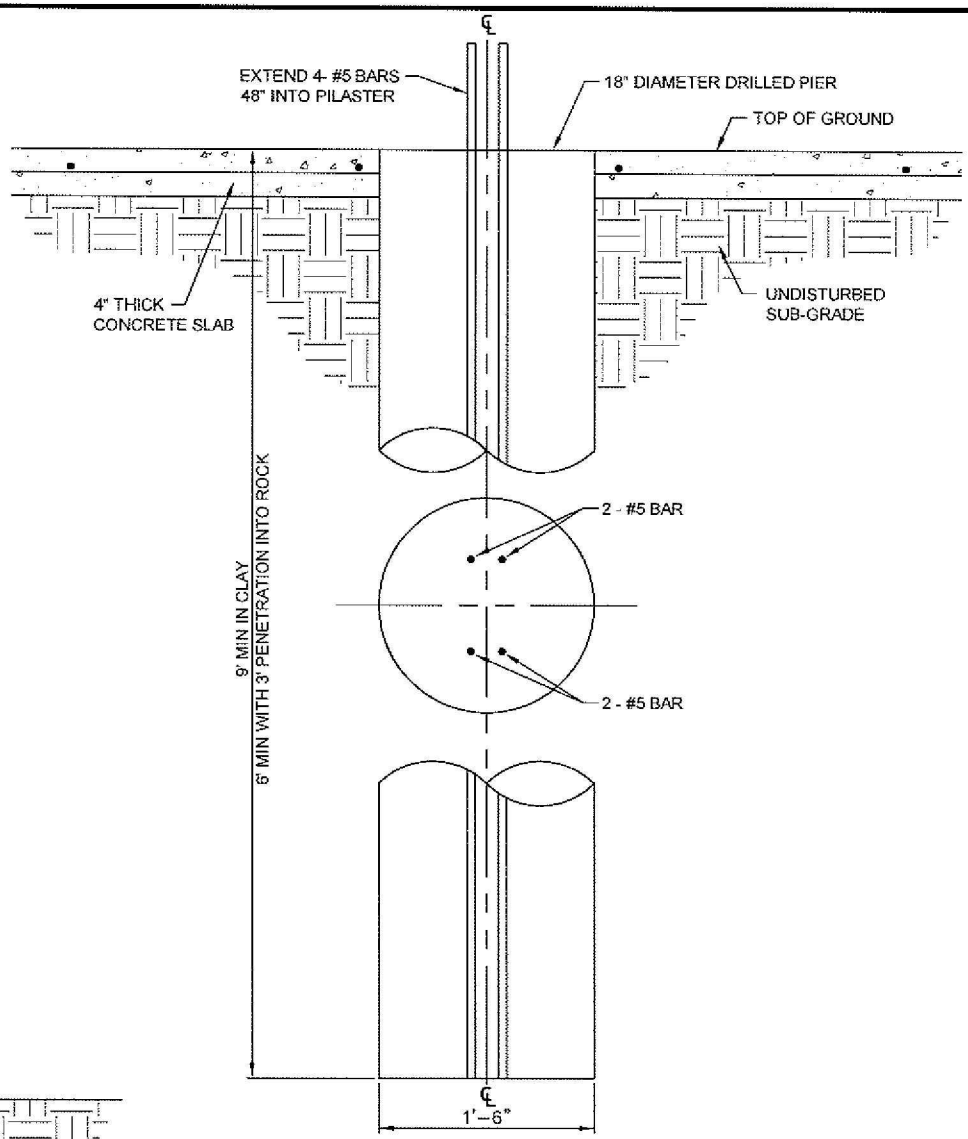

CITY OF SACHSE, TEXAS
DEPARTMENT OF ENGINEERING

STANDARD CONSTRUCTION DETAILS
MISCELLANEOUS DETAILS

SCREENING WALLS

APPROVED:

DATE: NOVEMBER 2008 | REVISED: | Page 7

SECTION 6-B
CULVERT RAILS

CITY OF SACHSE, TEXAS DEPARTMENT OF ENGINEERING		
STANDARD CONSTRUCTION DETAILS MISCELLANEOUS DETAILS		
CULVERT RAILS		
APPROVED:		
DATE: NOVEMBER 2008	REVISED:	Page 1

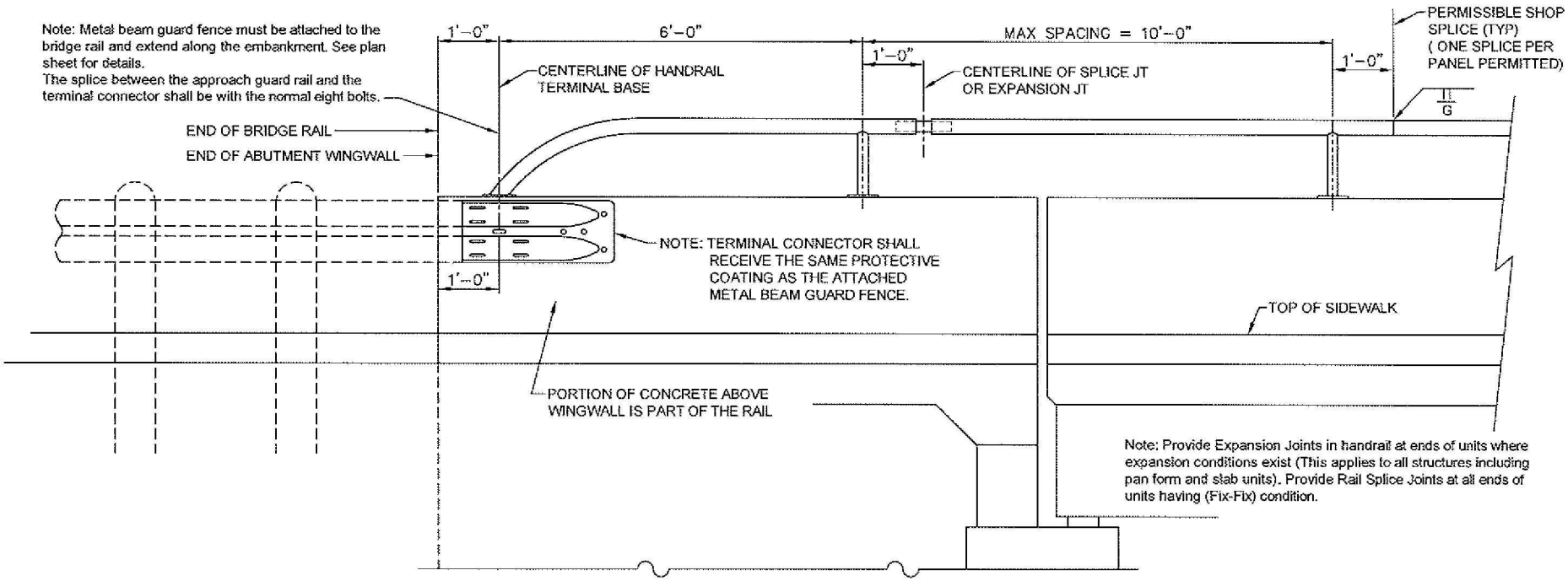

AT ABUTMENT BENTS

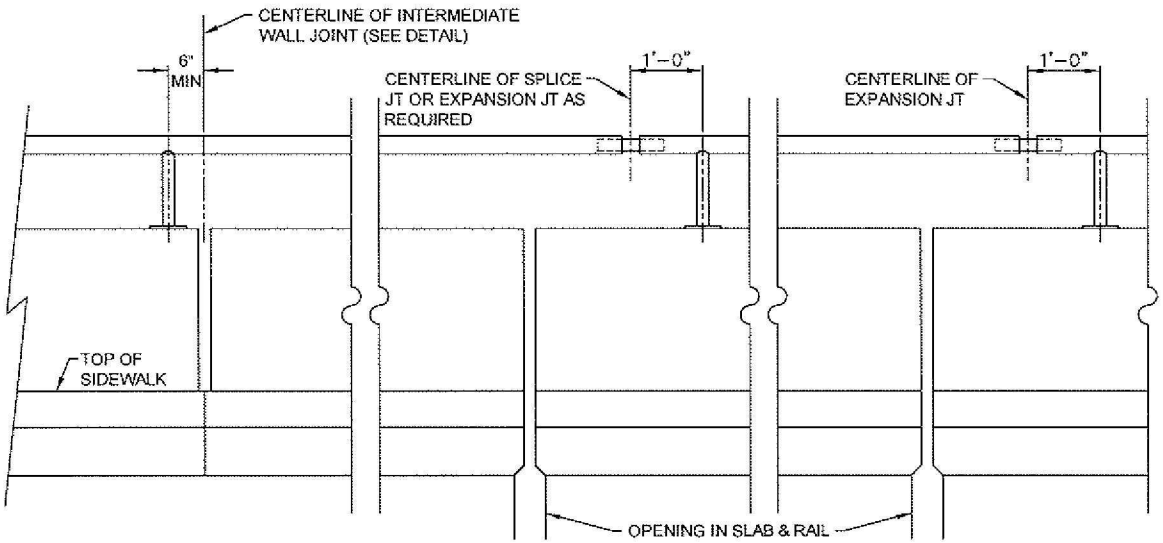

AT SLAB CONST. JTS. AT ENDS OF UNITS AT FINGER JTS.

ROADWAY ELEVATION OF RAIL

CITY OF SACHSE, TEXAS DEPARTMENT OF ENGINEERING		
STANDARD CONSTRUCTION DETAILS MISCELLANEOUS DETAILS		
CULVERT RAILS		
APPROVED:		
DATE: NOVEMBER 2008	REVISED:	Page 2

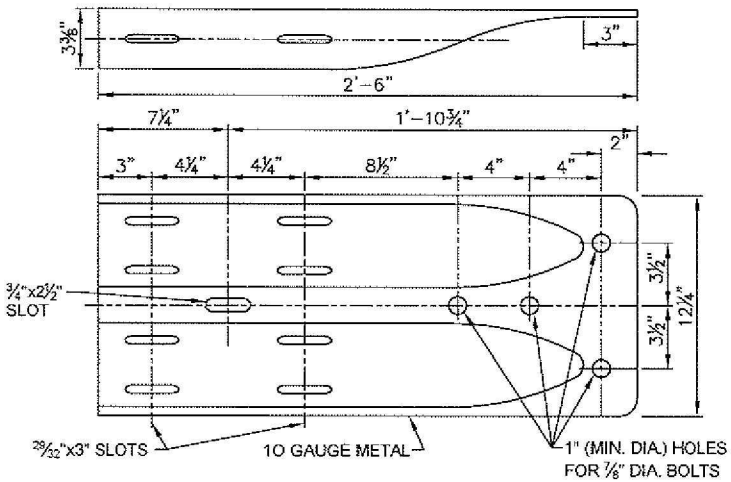

TERMINAL CONNECTOR

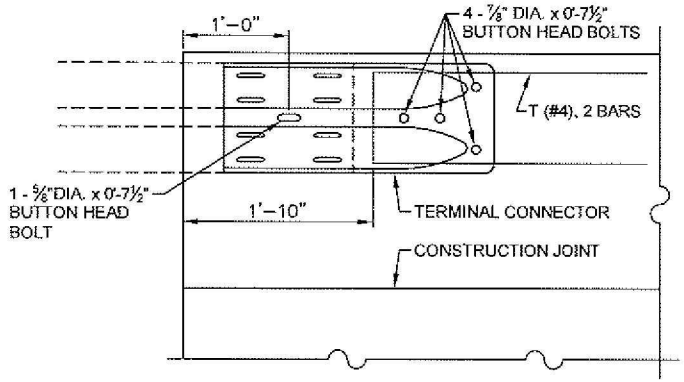

TERMINAL CONNECTION

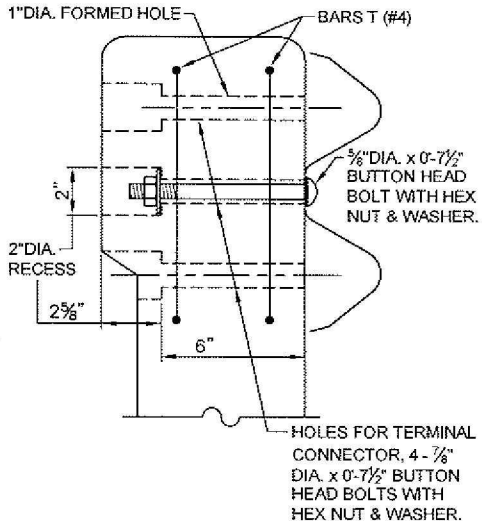

TYPICAL BEAM TO WALL CONNECTION

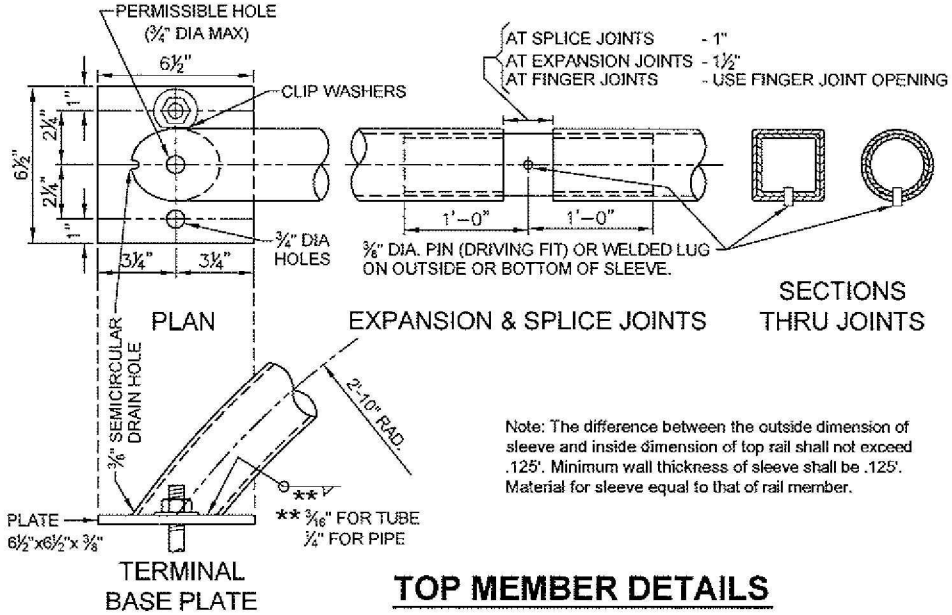

Note: The difference between the outside dimension of sleeve and inside dimension of top rail shall not exceed .125'. Minimum wall thickness of sleeve shall be .125'. Material for sleeve equal to that of rail member.

TOP MEMBER DETAILS

Note: Parallel or Flared Wingwalls shall be constructed in conformance with standard details of the State Department of Highways and Public Transportation. Details for raising height of Wingwalls should be included in the Plans. Also flared wingwalls must be adjusted for 3:1 channel slopes.

CITY OF SACHSE, TEXAS DEPARTMENT OF ENGINEERING		
STANDARD CONSTRUCTION DETAILS MISCELLANEOUS DETAILS		
CULVERT RAILS		
APPROVED:		
DATE: NOVEMBER 2008	REVISED:	Page 3

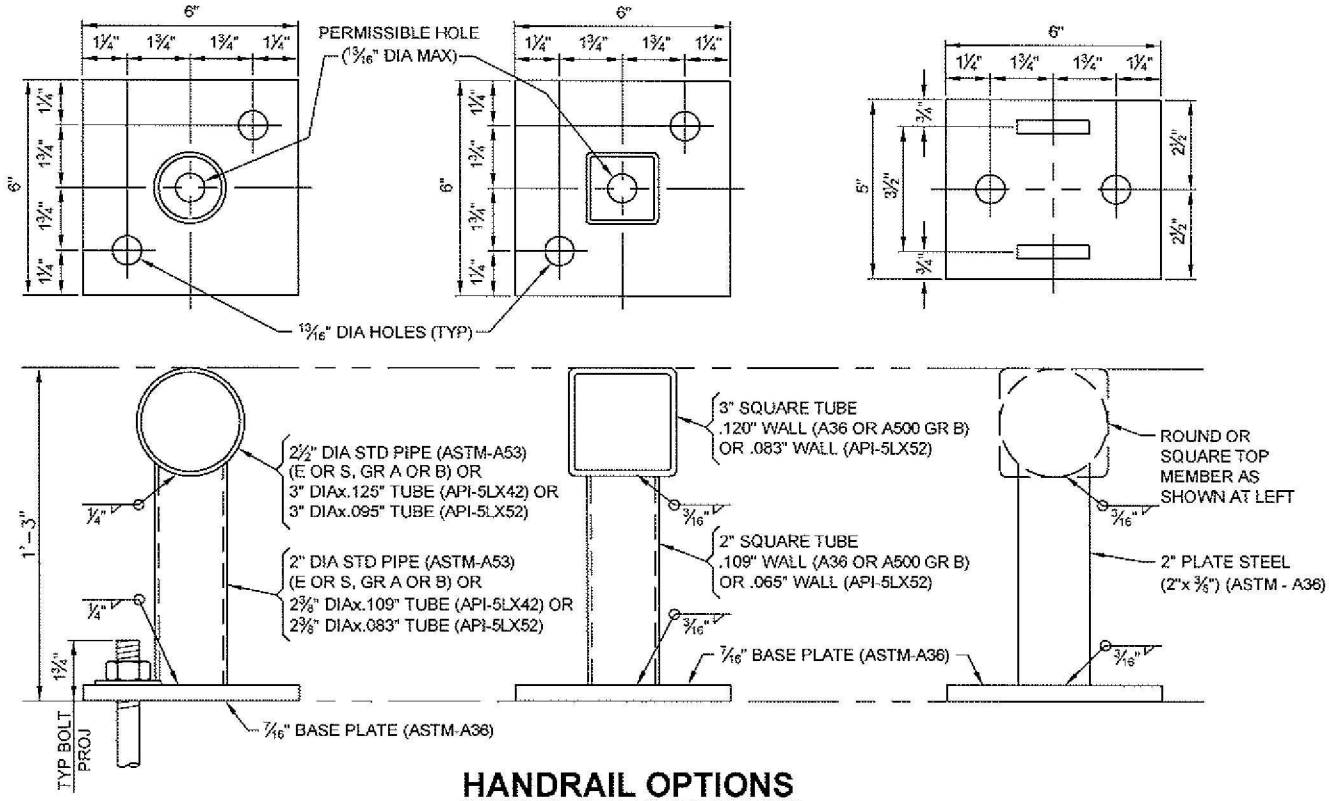

HANDRAIL OPTIONS

GENERAL NOTES:

Designed in accordance with AASHTO 1977 Standard and current Interim Specifications.

All parapet concrete and reinforcing, including that embedded in the slab or wingwalls, the terminal connector and the connection to the deep beam guard rail are considered part of Type C201 Railing.

Concrete for railing wall shall be Class C. Chamfer all exposed corners ¾" unless otherwise shown.

All steel connecting bolts and fasteners for aluminum or steel railing and all anchor bolts, nuts and washers shall be galvanized after fabrication.

Whichever of the various handrail options is selected for use shall be used throughout the entire project.

Handrail sections shall be made continuous over not less than two posts nor more than four (except at Abutments)

- Non Aluminum Railing Required -

♦ Loss of one half the tolerance provided between bolts and holes, or between splice sleeves and rail members has been allowed in determining these controls.

♦ RAILS ON HORIZONTAL CURVES

	Radius to Face of Rail	Max. Chord Length	Construction or Fabrication
Railing Wall	Over 3200'	33'-0"	Construct wall to the required radius or in chords shown
	Over 2000' - 3200'	20'-0"	
	Over 300' - 2000'	10'-0"	
	Thru 300'	0	Construct wall to the required radius
Handrail ♦	Over 2800'	29'-0"	Furnish in straight rail panels
	Over 1400' - 2800'	14'-6"	Bend chord sections or fabricate to the required radius
	Over 700' - 1400'	7'-3"	
	Thru 700'	0	Fabricate to the required radius

CITY OF SACHSE, TEXAS
DEPARTMENT OF ENGINEERING

STANDARD CONSTRUCTION DETAILS
MISCELLANEOUS DETAILS

CULVERT RAILS

APPROVED:

DATE: NOVEMBER 2008 | REVISED: | Page 4

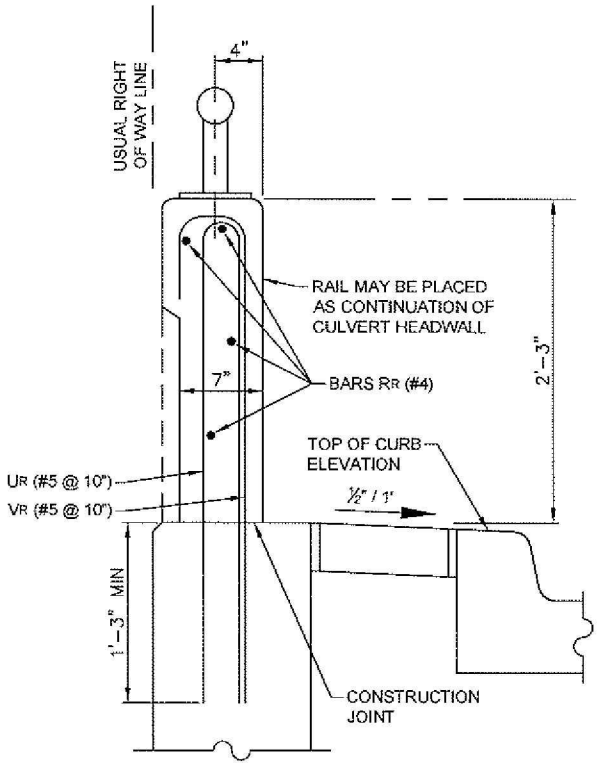

SEC. THRU RAIL ON ABUT. WING OR CULVERT HEADWALL

SECTIONS THRU RAIL

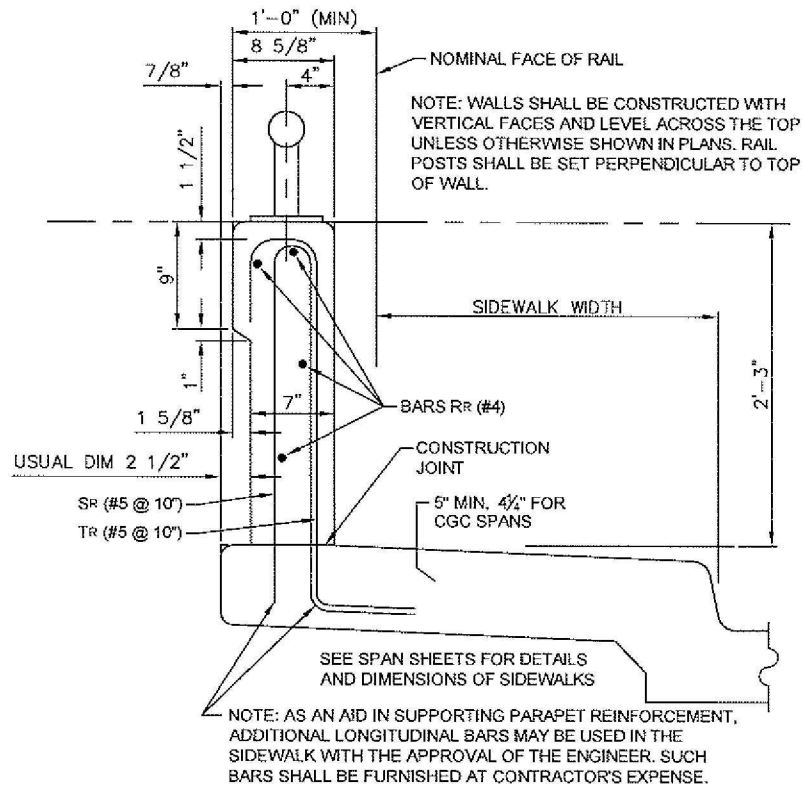

SEC. THRU BRIDGE SIDEWALK

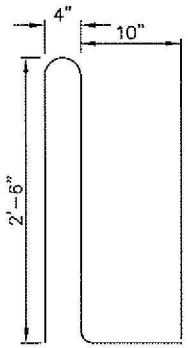

BARS SK (#5)

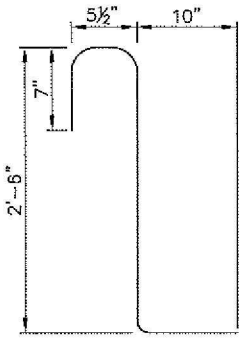

BARS TR (#5)

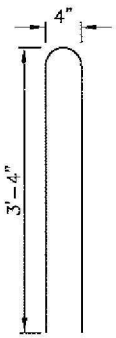

BARS UR (#5)

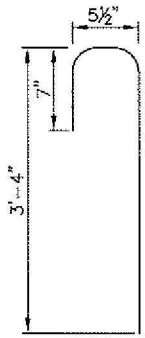

BARS VR (#5)

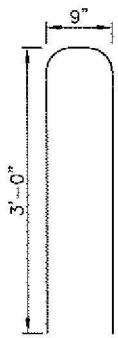

BARS T (#4)

CITY OF SACHSE, TEXAS DEPARTMENT OF ENGINEERING		
STANDARD CONSTRUCTION DETAILS MISCELLANEOUS DETAILS		
CULVERT RAILS		
APPROVED:		
DATE: NOVEMBER 2008	REVISED:	Page 5

THIS STANDARD CONSTRUCTION DETAIL IS INCLUDED FOR INFORMATION PURPOSES ONLY. REVISIONS BY OTHERS MAY OCCUR.

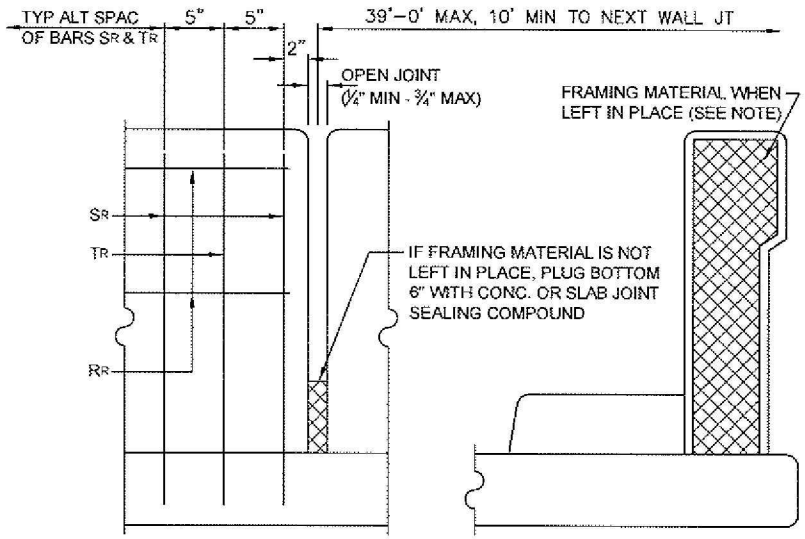

Note: Provide intermediate wall joints over all slab construction joints, over interior supports on continuous units, and at equal intervals inbetween as necessary to maintain a 33' max. length of unbroken wall.

Material used in forming joint may be left in place if it is compressible and light in color such as the following materials: polystyrene, molded cork granules, sponge rubber sheet, etc.

INTERMEDIATE WALL JOINT

APPROX. P.L.F. QUANTITIES *		
CONCRETE	C.Y.	0.053
REINF. STEEL	LB.	13.89

* Note: P.L.F. Quantities shown are for concrete and reinforcing steel in railing wall above main slab, including portions of steel bars anchored in slab. These quantities are for Contractor's information only.

State Department of Highways and Public Transportation combination Rail Type C201 Standard Detail.

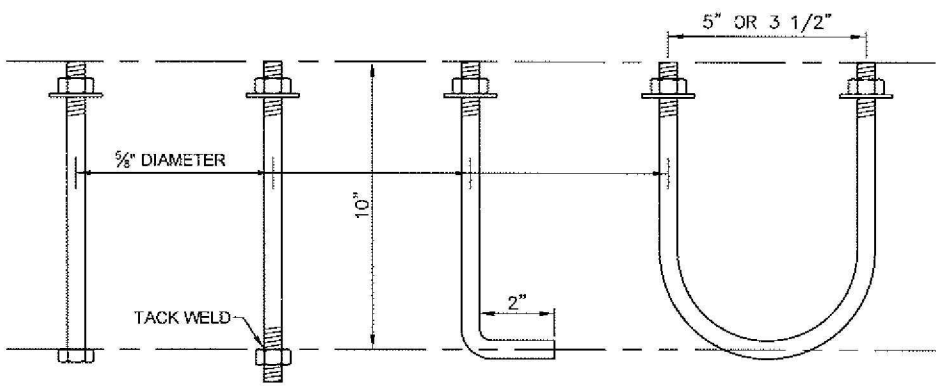

ANCHOR BOLT OPTIONS FOR HANDRAIL

Threaded rods may be .557" minimum diameter with rolled threads.

CITY OF SACHSE, TEXAS
DEPARTMENT OF ENGINEERING

STANDARD CONSTRUCTION DETAILS
MISCELLANEOUS DETAILS

CULVERT RAILS

APPROVED:

DATE: NOVEMBER 2008 | REVISED: | Page 6

SECTION 6-C
HEADWALL DETAILS

CITY OF SACHSE, TEXAS DEPARTMENT OF ENGINEERING		
STANDARD CONSTRUCTION DETAILS MISCELLANEOUS DETAILS		
HEADWALL DETAILS		
APPROVED:		
DATE: NOVEMBER 2008	REVISED:	Page 1

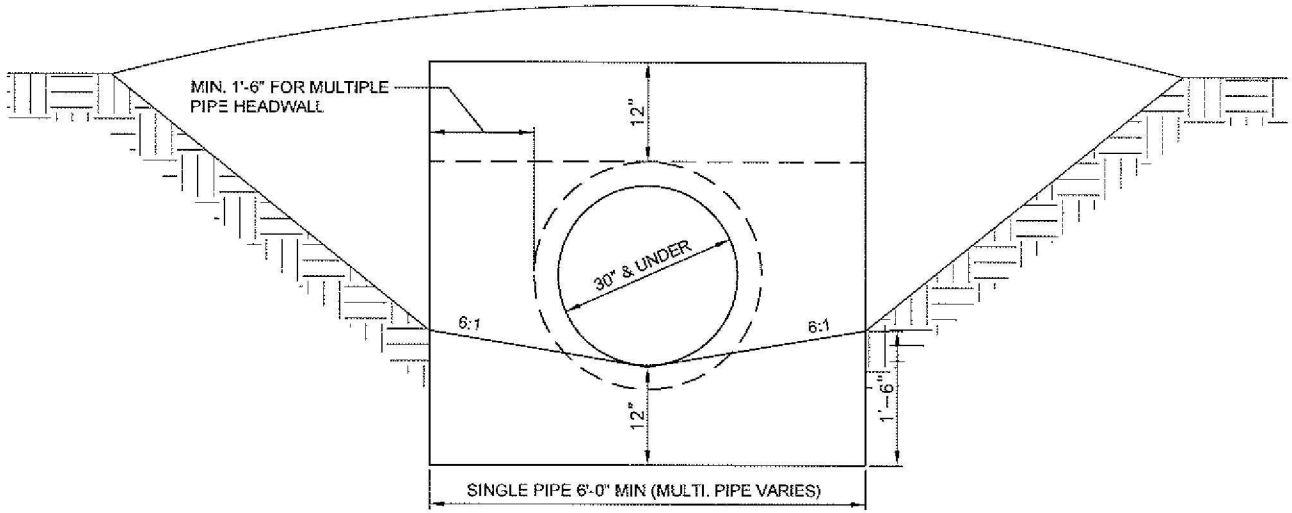

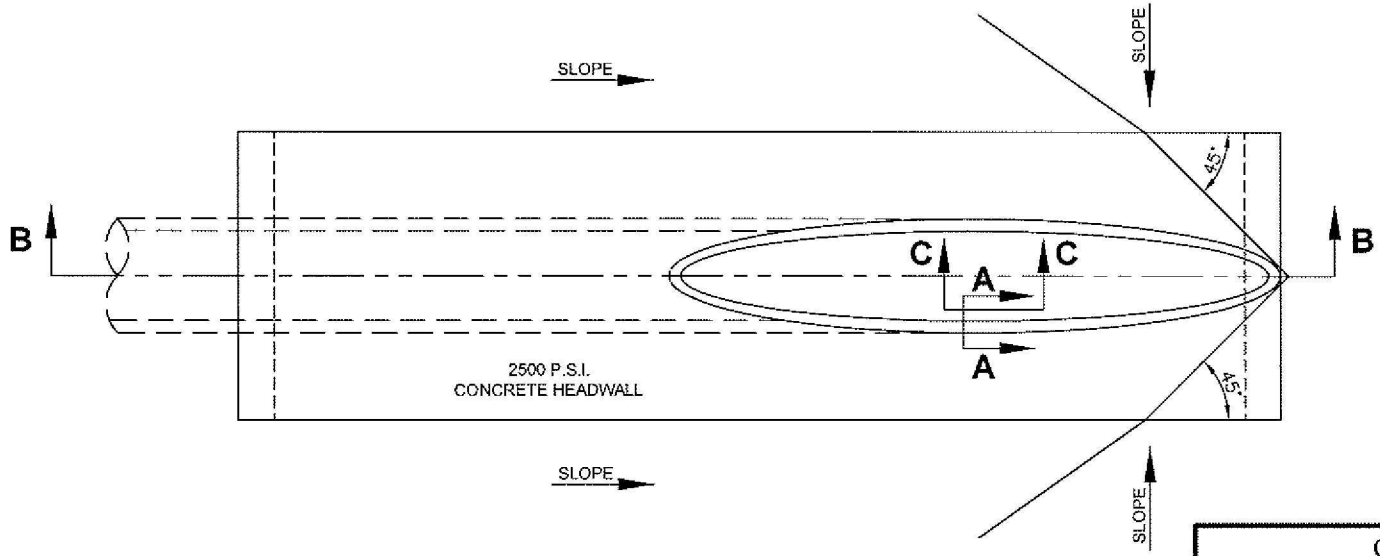

SPECIAL HEADWALL

(FOR HIGHWAY CULVERTS)
OR AS DIRECTED BY THE CITY

CITY OF SACHSE, TEXAS DEPARTMENT OF ENGINEERING		
STANDARD CONSTRUCTION DETAILS MISCELLANEOUS DETAILS		
HEADWALL DETAILS		
APPROVED:		
DATE: NOVEMBER 2008	REVISED:	Page 2

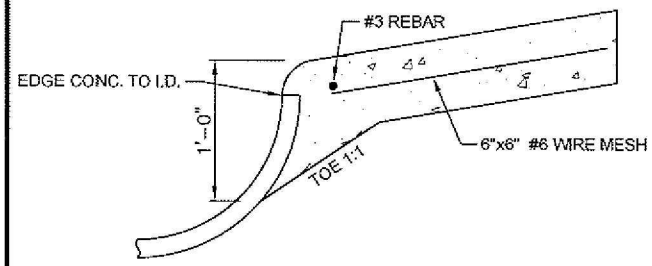

SECTION A-A
(CMP ONLY)

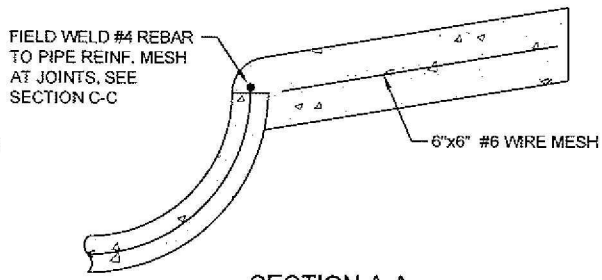

SECTION A-A
(RCP ONLY)

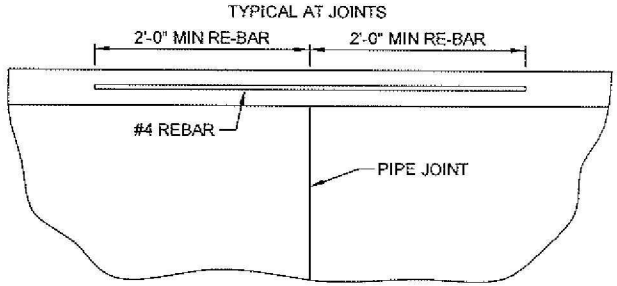

SECTION C-C

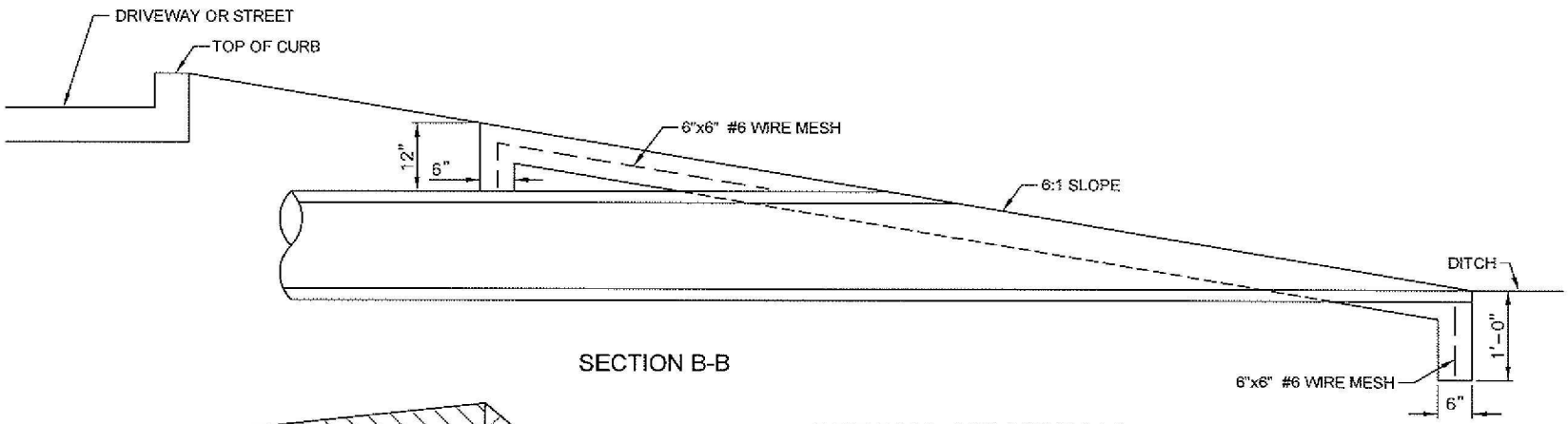

SECTION B-B

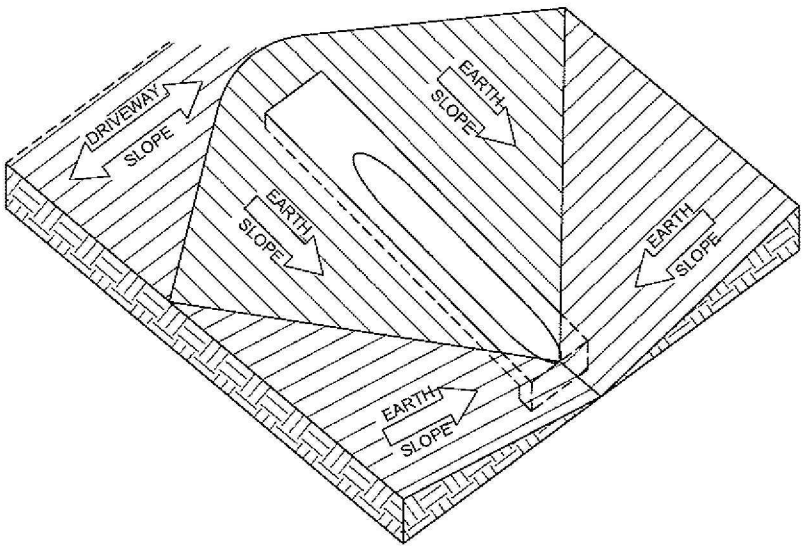

SPECIAL HEADWALL

(FOR HIGHWAY CULVERTS)
OR AS DIRECTED BY THE CITY

CITY OF SACHSE, TEXAS DEPARTMENT OF ENGINEERING		
STANDARD CONSTRUCTION DETAILS MISCELLANEOUS DETAILS		
HEADWALL DETAILS		
APPROVED:		
DATE: NOVEMBER 2008	REVISED:	Page 3

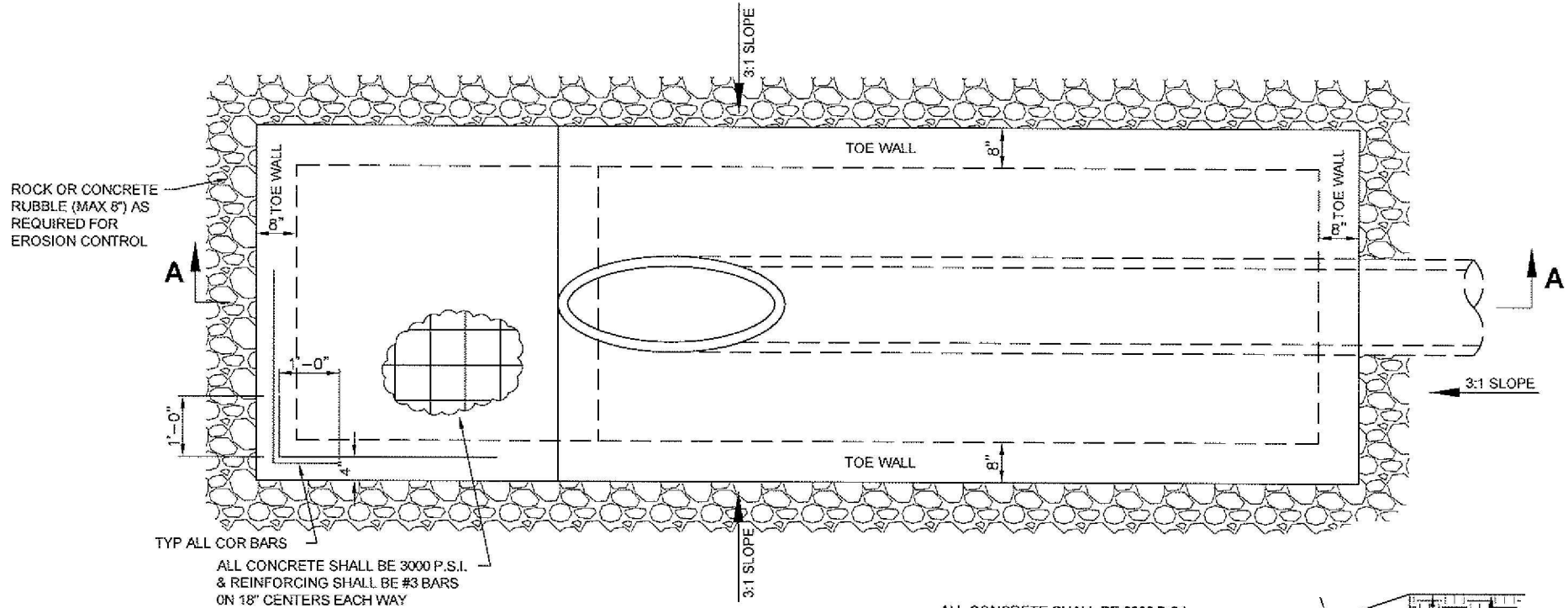

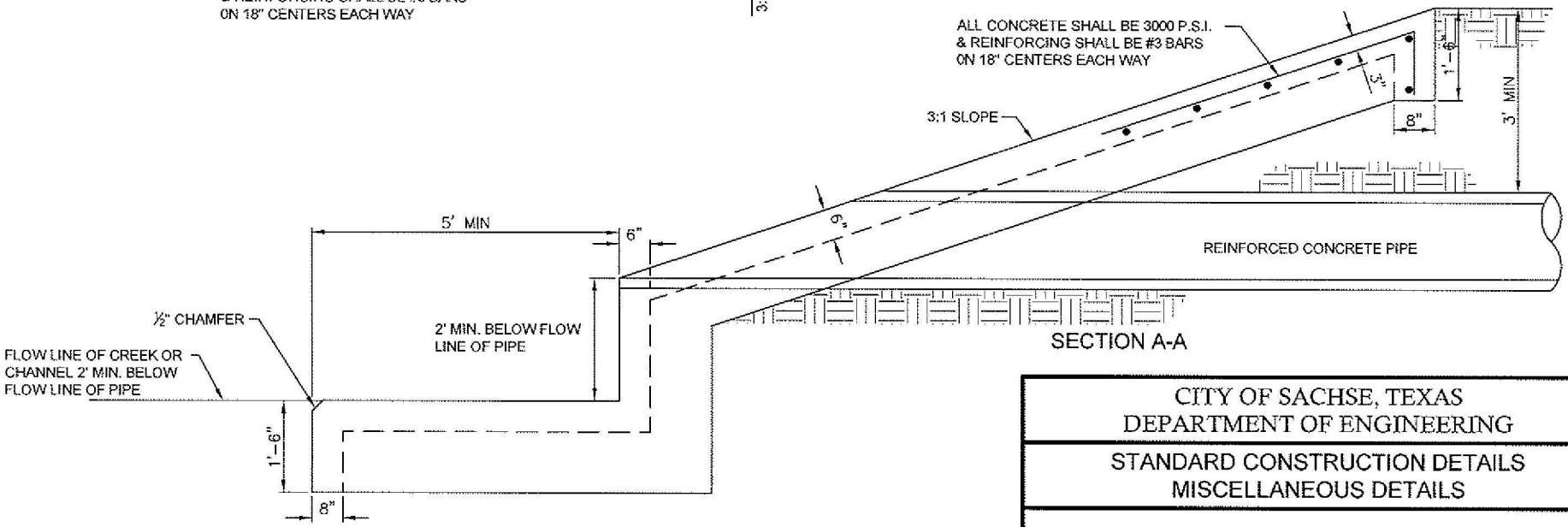

TYPE C HEADWALL

CITY OF SACHSE, TEXAS DEPARTMENT OF ENGINEERING		
STANDARD CONSTRUCTION DETAILS MISCELLANEOUS DETAILS		
HEADWALL DETAILS		
APPROVED:		
DATE: NOVEMBER 2008	REVISED:	Page 4

NOTICE:
NOTIFY SACHSE CITY ENGINEERING AT LEAST 48 HOURS PRIOR TO ANY CONSTRUCTION ON THIS PROJECT.

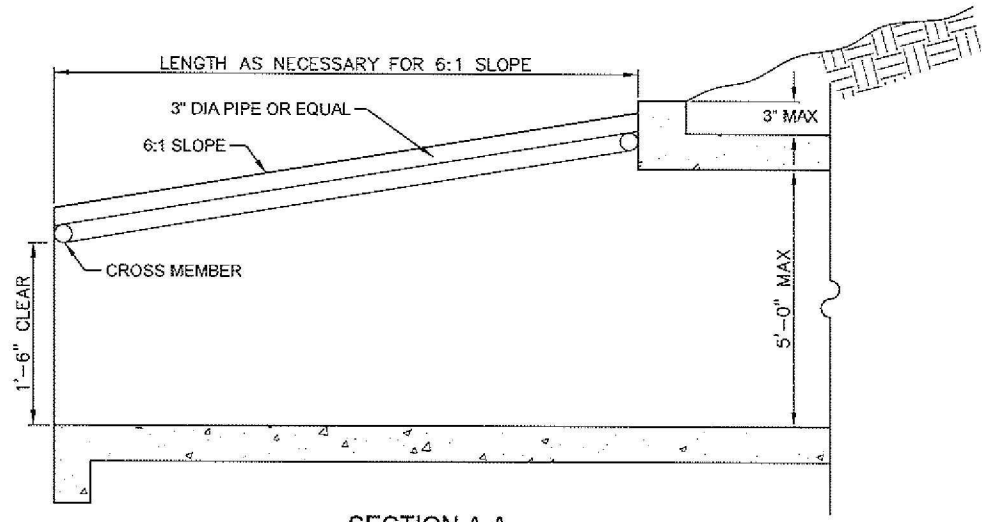

SECTION A-A

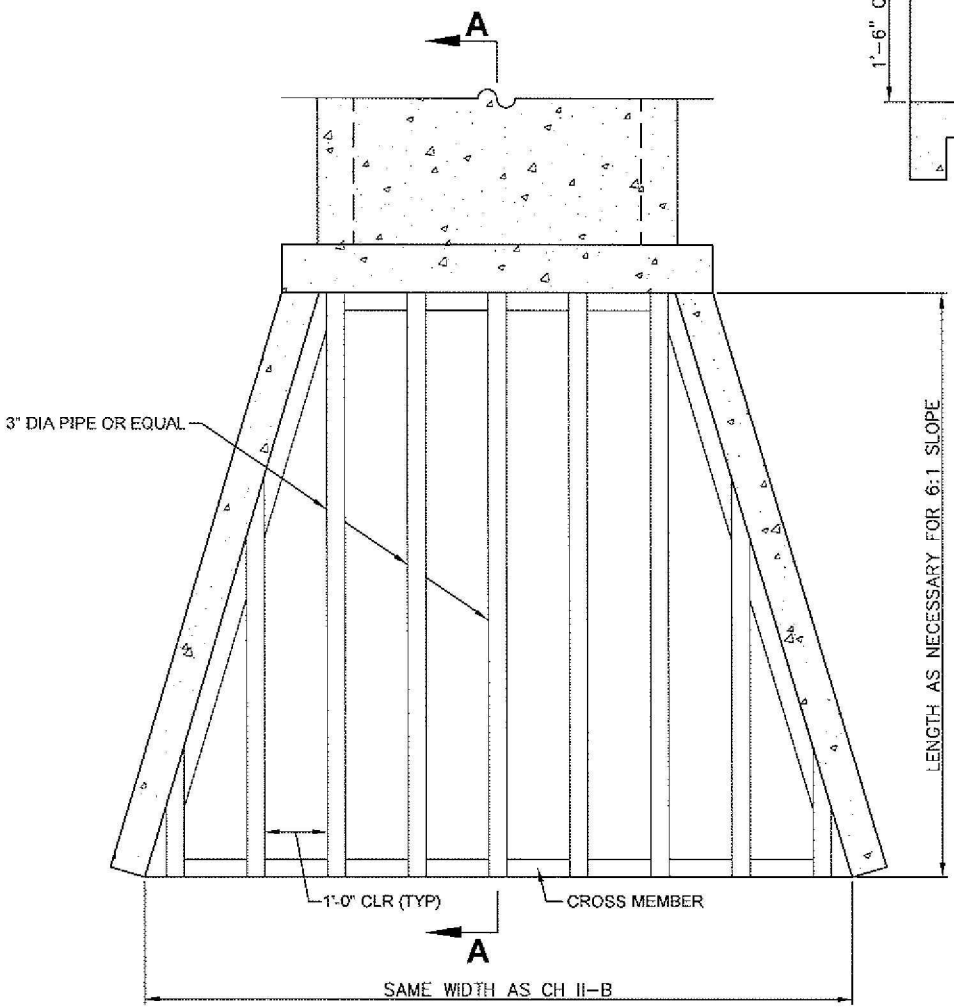

SAFETY GRATES FOR PIPE AND BOX CULVERTS

CITY OF SACHSE, TEXAS DEPARTMENT OF ENGINEERING		
STANDARD CONSTRUCTION DETAILS MISCELLANEOUS DETAILS		
HEADWALL DETAILS		
APPROVED:		
DATE: NOVEMBER 2008	REVISED:	Page 5

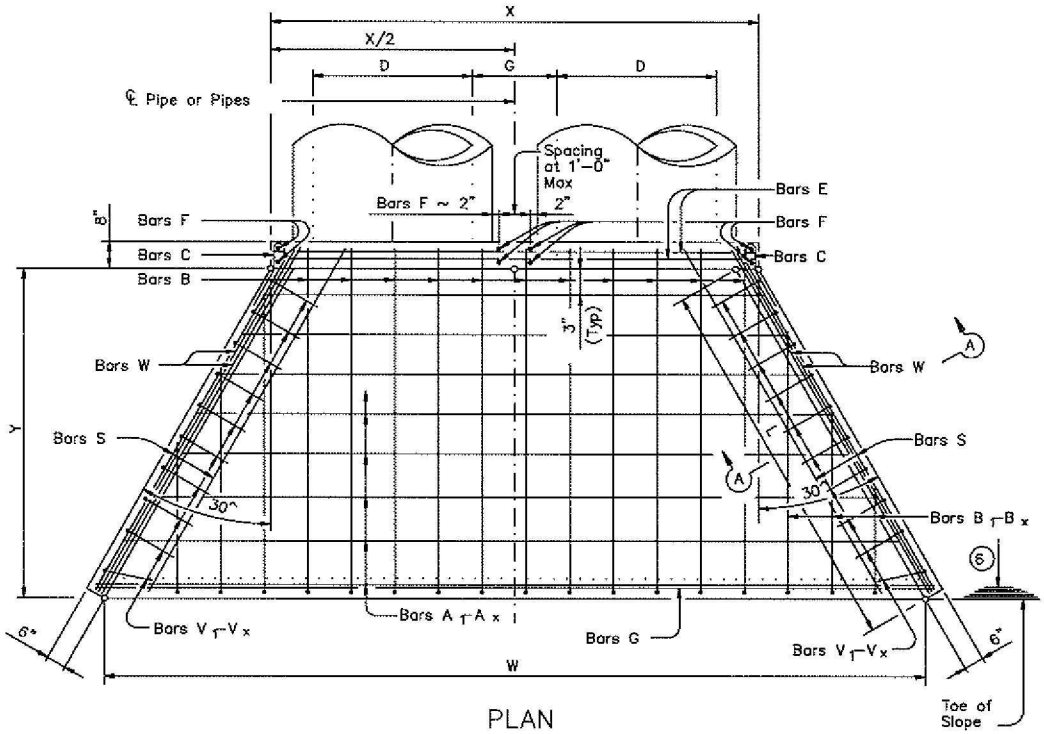

PLAN

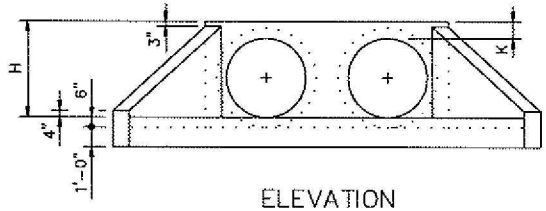

ELEVATION

Showing dimensions

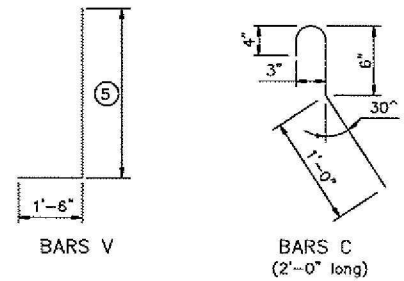

BARS V

BARS C
(2'-0" long)

BARS B & B1 --Bx

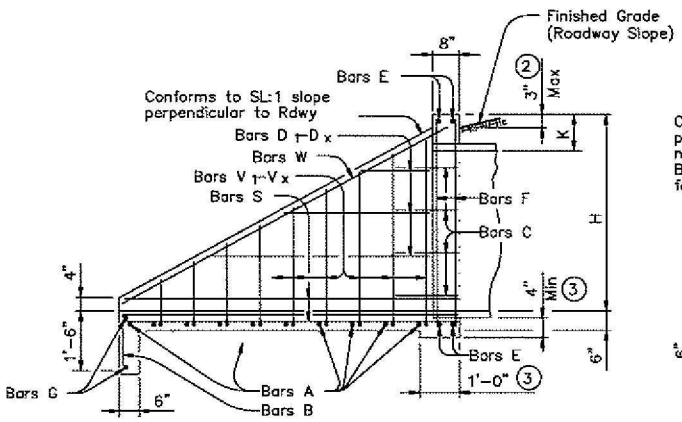

TYPICAL WING ELEVATION

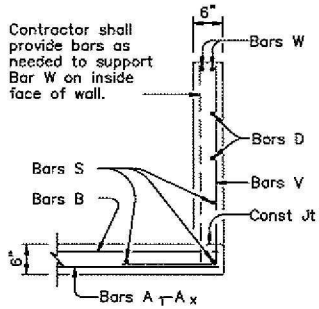

SECTION A–A

REFERENCE ONLY

THIS STANDARD DETAIL IS INCLUDED FOR INFORMATIONAL PURPOSES ONLY. REVISIONS BY OTHERS MAY OCCUR. REFER TO THE TEXAS DEPARTMENT OF TRANSPORTATION FOR THE LATEST REVISIONS TO THIS AND OTHER APPLICABLE STANDARDS.

DISCLAIMER:
The use of this standard is governed by the "Texas Engineering Practice Act". No warranty of any kind is made by TxDOT for any purpose whatsoever. TxDOT assumes no responsibility for the conversion of this standard to other formats or for incorrect results or damages resulting from its use.

Texas Department of Transportation
Bridge Division

CONCRETE HEADWALLS
WITH FLARED WINGS FOR
0° SKEW PIPE CULVERTS

CH-FW-0

FILE: chfw00ae.dgn	DN: TxDOT	CK: TxDOT	DW: TxDOT	CK: GAF	
©TxDOT May 2005	DISTRICT	FEDERAL AID PROJECT			SHEET
REVISIONS	COUNTY		CONTROL	SECT	JOB	HIGHWAY

CITY OF SACHSE, TEXAS
DEPARTMENT OF ENGINEERING

STANDARD CONSTRUCTION DETAILS
MISCELLANEOUS DETAILS

TXDOT HEADWALL DETAILS

APPROVED:

DATE: NOVEMBER 2008 | REVISED:

TABLE OF VARIABLE DIMENSIONS AND QUANTITIES FOR ONE HEADWALL (4)

SLOPE	DIA OF PIPE,D	Values for one Pipe						Values to be added for each addt'l Pipe		
		W	X	Y	L	Reinf (Lbs)	Conc (CY) (1)	X and W	Reinf (Lbs)	Conc (CY) (1)
2:1	12"	4'– 7"	2'– 6"	2'–10"	3'– 3"	84	0.6	1'– 9"	20	0.2
	15"	5'– 5"	2'– 9"	3'– 4"	3'–10"	99	0.7	2'– 2"	24	0.3
	18"	6'– 4"	3'– 1"	3'–10"	4'– 5"	120	0.9	2'– 8"	32	0.3
	21"	7'– 2"	3'– 4"	4'– 4"	5'– 0"	137	1.1	3'– 1"	43	0.4
	24"	8'– 2"	3'– 9"	4'–10"	5'– 7"	158	1.3	3'– 7"	50	0.5
	27"	9'– 1"	4'– 1"	5'– 4"	6'– 2"	173	1.5	3'–11"	56	0.6
	30"	9'–11"	4'– 4"	5'–10"	6'– 8"	197	1.7	4'– 4"	65	0.8
	33"	10'–10"	4'– 8"	6'– 4"	7'– 3"	216	2.0	4'– 8"	71	0.9
	36"	11'– 8"	4'–11"	6'–10"	7'–10"	241	2.2	5'– 1"	81	1.0
	42"	13'– 5"	5'– 6"	7'–10"	9'– 0"	290	2.8	5'–10"	97	1.3
	48"	15'– 9"	6'– 1"	9'– 4"	10'– 9"	350	3.8	6'– 7"	117	1.7
	54"	17'– 5"	6'– 8"	10'– 4"	11'–11"	415	4.5	7'– 6"	151	2.1
	60"	19'– 2"	7'– 3"	11'– 4"	13'– 1"	469	5.3	8'– 3"	174	2.5
	66"	20'–11"	7'–10"	12'– 4"	14'– 3"	530	6.2	8'– 9"	194	2.9
	72"	22'– 8"	8'– 5"	13'– 4"	15'– 4"	587	7.1	9'– 4"	213	3.3
3:1	12"	6'– 3"	2'– 6"	4'– 3"	4'–11"	114	0.8	1'– 9"	22	0.2
	15"	7'– 5"	2'– 9"	5'– 0"	5'– 9"	133	1.1	2'– 2"	28	0.3
	18"	8'– 6"	3'– 1"	5'– 9"	6'– 7"	166	1.3	2'– 8"	37	0.5
	21"	9'– 8"	3'– 4"	6'– 6"	7'– 6"	189	1.6	3'– 1"	48	0.6
	24"	11'– 0"	3'– 9"	7'– 3"	8'– 4"	221	2.0	3'– 7"	58	0.7
	27"	12'– 2"	4'– 1"	8'– 0"	9'– 2"	245	2.3	3'–11"	67	0.8
	30"	13'– 4"	4'– 4"	8'– 9"	10'– 1"	287	2.7	4'– 4"	77	1.0
	33"	14'– 5"	4'– 8"	9'– 6"	10'–11"	310	3.1	4'– 8"	84	1.2
	36"	15'– 7"	4'–11"	10'– 3"	11'–10"	343	3.5	5'– 1"	96	1.4
	42"	17'–11"	5'– 6"	11'– 9"	13'– 6"	424	4.5	5'–10"	119	1.7
	48"	21'– 1"	6'– 1"	14'– 0"	16'– 2"	527	6.1	6'– 7"	146	2.3
	54"	23'– 5"	6'– 8"	15'– 6"	17'–10"	618	7.3	7'– 6"	186	2.9
	60"	25'– 9"	7'– 3"	17'– 0"	19'– 7"	707	8.7	8'– 3"	219	3.4
	66"	28'– 1"	7'–10"	18'– 6"	21'– 4"	797	10.1	8'– 9"	242	3.9
	72"	30'– 4"	8'– 5"	20'– 0"	23'– 1"	910	11.7	9'– 4"	272	4.4
4:1	12"	7'–10"	2'– 6"	5'– 8"	6'– 6"	144	1.1	1'– 9"	24	0.3
	15"	9'– 4"	2'– 9"	6'– 8"	7'– 8"	177	1.5	2'– 2"	32	0.4
	18"	10'– 9"	3'– 1"	7'– 8"	8'–10"	217	1.9	2'– 8"	42	0.5
	21"	12'– 2"	3'– 4"	8'– 8"	10'– 0"	254	2.3	3'– 1"	57	0.7
	24"	13'– 9"	3'– 9"	9'– 8"	11'– 2"	295	2.8	3'– 7"	67	0.9
	27"	15'– 3"	4'– 1"	10'– 8"	12'– 3"	328	3.3	3'–11"	77	1.0
	30"	16'– 8"	4'– 4"	11'– 8"	13'– 5"	379	3.8	4'– 4"	89	1.3
	33"	18'– 1"	4'– 8"	12'– 8"	14'– 7"	417	4.5	4'– 8"	101	1.4
	36"	19'– 7"	4'–11"	13'– 8"	15'– 9"	464	5.1	5'–1"	115	1.7
	42"	22'– 5"	5'– 6"	15'– 8"	18'– 1"	575	6.5	5'–10"	141	2.1
	48"	26'– 6"	6'– 1"	18'– 8"	21'– 6"	720	8.9	6'– 7"	175	2.8
	54"	29'– 5"	6'– 8"	20'– 8"	23'–10"	863	10.7	7'– 6"	226	3.6
	60"	32'– 3"	7'– 3"	22'– 8"	26'– 2"	984	12.7	8'– 3"	264	4.3
	66"	35'– 2"	7'–10"	24'– 8"	28'– 5"	1126	14.9	8'– 9"	300	4.9
	72"	38'– 1"	8'– 5"	26'– 8"	30'– 9"	1283	17.3	9'– 4"	334	5.6
6:1	12"	11'– 2"	2'– 6"	8'– 6"	9'– 9"	220	1.9	1'– 9"	28	0.4
	15"	13'– 2"	2'– 9"	10'– 0"	11'– 6"	264	2.5	2'– 2"	37	0.5
	18"	15'– 2"	3'– 1"	11'– 6"	13'– 3"	326	3.2	2'– 8"	50	0.7
	21"	17'– 2"	3'– 4"	13'– 0"	15'– 0"	381	3.9	3'– 1"	69	0.9
	24"	19'– 4"	3'– 9"	14'– 6"	16'– 9"	447	4.8	3'– 7"	80	1.2
	27"	21'– 4"	4'– 1"	16'– 0"	18'– 5"	506	5.7	3'–11"	96	1.4
	30"	23'– 5"	4'– 4"	17'– 6"	20'– 2"	587	6.7	4'– 4"	110	1.7
	33"	25'– 5"	4'– 8"	19'– 0"	21'–11"	667	7.8	4'– 8"	127	2.0
	36"	27'– 5"	4'–11"	20'– 6"	23'– 8"	727	9.0	5'– 1"	144	2.3
	42"	31'– 6"	5'– 6"	23'– 6"	27'– 1"	914	11.5	5'–10"	179	3.0
	48"	37'– 3"	6'– 1"	28'– 0"	32'– 4"	1181	15.9	6'– 7"	231	4.0
	54"	41'– 4"	6'– 8"	31'– 0"	35'– 9"	1412	19.2	7'– 6"	300	5.0
	60"	45'– 4"	7'– 3"	34'– 0"	39'– 3"	1619	22.9	8'– 3"	353	6.0

(1) Quantities shown are for concrete pipe and will increase slightly for metal pipe installations.

(2) For vehicle safety, curbs shall project no more than 3" above finished grade. Curb heights shall be reduced, if necessary, to meet these requirements. No changes will be made in quantities and no additional compensation will be allowed for this work.

(3) Provide a 1'–0" footing as shown where required to maintain 4" Min cover for pipes.

(4) Quantities shown are for one structure end only (one headwall).

(5) Min Length = 6" $\cancel{3"}$ x $\left(\frac{12 \times H - 7}{12 \times L}\right)$

Max Length = 12 x H $\cancel{3"}$ x $\left(\frac{12 \times H - 7}{12 \times L}\right)$ –

(6) Lengths of wings based on SL:1 Slope along this line.

TABLE OF REINFORCING STEEL (4)

Bar	Size	Spa	No.
A	# 4	1'–0"	~
B	# 3	1'–6"	~
C	# 4	1'–0"	~
D	# 3	1'–0"	~
E	# 5	~	4
F	# 5	~	~
G	# 3	~	2
S	# 4	~	6
V	# 4	1'–0"	~
W	# 5	~	4

TABLE OF CONSTANT DIMENSIONS

DIA OF PIPE,D	G	K	H
12"	9"	1'– 0"	2'– 0"
15"	11"	1'– 0"	2'– 3"
18"	1'– 2"	1'– 0"	2'– 6"
21"	1'– 4"	1'– 0"	2'– 9"
24"	1'– 7"	1'– 0"	3'– 0"
27"	1'– 8"	1'– 0"	3'– 3"
30"	1'–10"	1'– 0"	3'– 6"
33"	1'–11"	1'– 0"	3'– 9"
36"	2'– 1"	1'– 0"	4'– 0"
42"	2'– 4"	1'– 0"	4'– 6"
48"	2'– 7"	1'– 3"	5'– 3"
54"	3'– 0"	1'– 3"	5'– 9"
60"	3'– 3"	1'– 3"	6'– 3"
66"	3'– 3"	1'– 3"	6'– 9"
72"	3'– 4"	1'– 3"	7'– 3"

GENERAL NOTES:
Designed according to current AASHTO Standard and Interim Specifications.
Reinforcing steel shall be placed with the center of the outside layer of bars 2" from the surface of the concrete.
All reinforcing steel shall be Grade 60.
All concrete shall be Class "C" and shall have a minimum compressive strength of 3500 psi.
No bridge rails of any type may be mounted directly to these culvert headwalls.

DISCLAIMER:
The use of this standard is governed by the "Texas Engineering Practice Act". No warranty of any kind is made by TxDOT for any purpose whatsoever. TxDOT assumes no responsibility for the conversion of this standard to other formats or for incorrect results or damages resulting from its use.

REFERENCE ONLY
THIS STANDARD DETAIL IS INCLUDED FOR INFORMATIONAL PURPOSES ONLY. REVISIONS BY OTHERS MAY OCCUR. REFER TO THE TEXAS DEPARTMENT OF TRANSPORTATION FOR THE LATEST REVISIONS TO THIS AND OTHER APPLICABLE STANDARDS.

Texas Department of Transportation
Bridge Division

CONCRETE HEADWALLS WITH FLARED WINGS FOR 0° SKEW PIPE CULVERTS

CH–FW–0

FILE: chfw00se.dgn	DN: TxDOT	CK: TxDOT	DW: TxDOT	CK: GAF
©TxDOT May 2005	DISTRICT	FEDERAL AID PROJECT		SHEET
REVISIONS	COUNTY	CONTROL	SECT	JOB	HIGHWAY

CITY OF SACHSE, TEXAS
DEPARTMENT OF ENGINEERING

STANDARD CONSTRUCTION DETAILS
MISCELLANEOUS DETAILS

TXDOT HEADWALL DETAILS

APPROVED:

DATE: NOVEMBER 2008 | REVISED:

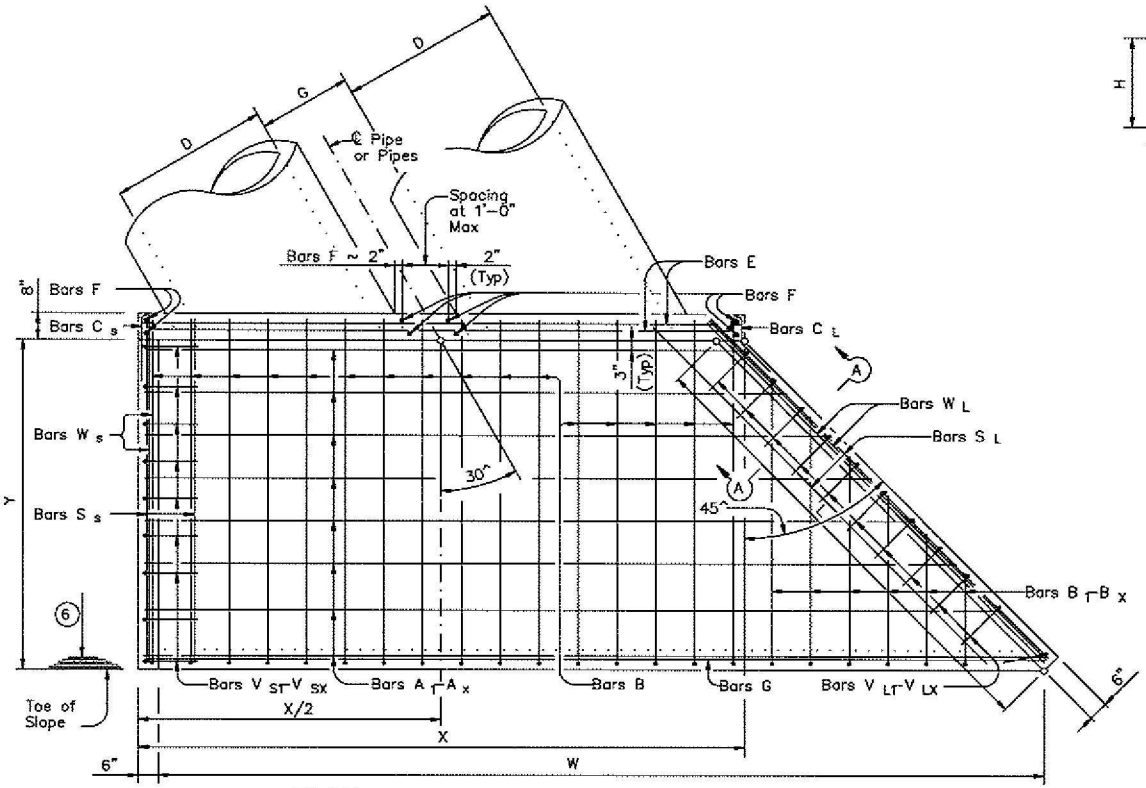

PLAN

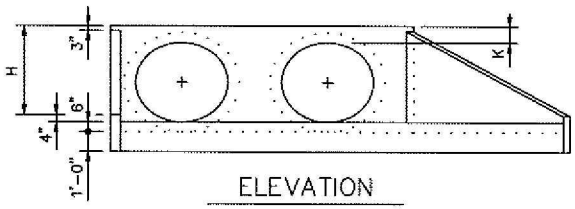

ELEVATION

Showing dimensions

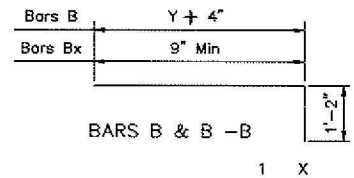

BARS B & B -B

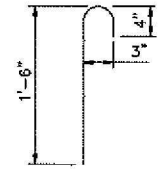

BARS Cs
(2'-0" long)

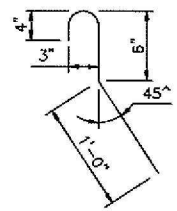

BARS CL
(2'-0" long)

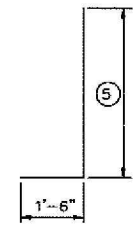

BARS Vs & VL

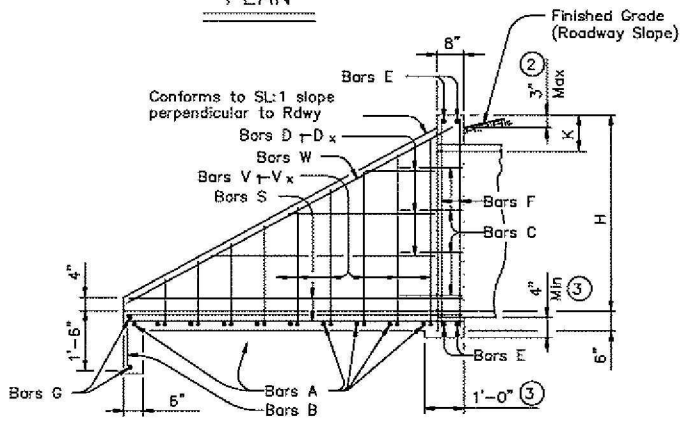

TYPICAL WING ELEVATION

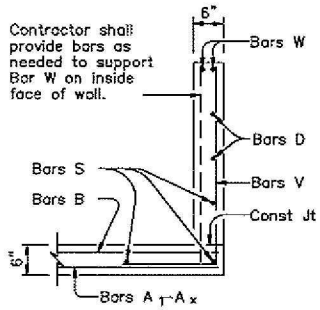

SECTION A-A

DISCLAIMER:
The use of this standard is governed by the "Texas Engineering Practice Act". No warranty of any kind is made by TxDOT for any purpose whatsoever. TxDOT assumes no responsibility for the conversion of this standard to other formats or for incorrect results or damages resulting from its use.

REFERENCE ONLY

THIS STANDARD DETAIL IS INCLUDED FOR INFORMATIONAL PURPOSES ONLY. REVISIONS BY OTHERS MAY OCCUR. REFER TO THE TEXAS DEPARTMENT OF TRANSPORTATION FOR THE LATEST REVISIONS TO THIS AND OTHER APPLICABLE STANDARDS.

Texas Department of Transportation
Bridge Division

CONCRETE HEADWALLS WITH FLARED WINGS FOR 30° SKEW PIPE CULVERTS

CH-FW-30

FILE: chfw30se.dgn	DN: TxDOT	CK: TxDOT	DW: TxDOT	CK: GAF
©TxDOT May 2005	DISTRICT	FEDERAL AID PROJECT		SHEET
REVISIONS	COUNTY	CONTROL	SECT	JOB	HIGHWAY

CITY OF SACHSE, TEXAS
DEPARTMENT OF ENGINEERING

STANDARD CONSTRUCTION DETAILS
MISCELLANEOUS DETAILS

TXDOT HEADWALL DETAILS

APPROVED:

DATE: NOVEMBER 2008 | REVISED:

TABLE OF VARIABLE DIMENSIONS AND QUANTITIES FOR ONE HEADWALL (4)

SLOPE	DIA OF PIPE,D	Values for one Pipe						Values to be added for each addt'l Pipe		
		W	X	Y	L	Reinf (Lbs)	Conc (CY) (1)	X and W	Reinf (Lbs)	Conc (CY) (1)
2:1	12"	4'- 9"	3'- 1 "	2'-10"	4'- 0"	90	0.6	2'- 0 "	22	0.2
	15"	5'- 6 "	3'- 5 "	3'- 4"	4'- 8 "	102	0.8	2'- 6"	28	0.3
	18"	6'- 4 "	3'- 9 "	3'-10"	5'- 5"	129	0.9	3'- 1"	41	0.4
	21"	7'- 2 "	4'- 1 "	4'- 4"	6'- 1 "	144	1.1	3'- 6 "	47	0.5
	24"	8'- 2 "	4'- 7"	4'-10"	6'-10"	164	1.4	4'- 1 "	57	0.6
	27"	9'- 0 "	4'-11"	5'- 4"	7'- 6 "	178	1.6	4'- 6 "	62	0.7
	30"	9'-10 "	5'- 3"	5'-10"	8'- 3"	212	1.8	5'- 0"	72	0.9
	33"	10'- 8 "	5'- 7"	6'- 4"	8'-11 "	225	2.1	5'- 4 "	79	1.0
	36"	11'- 6 "	5'-11 "	6'-10"	9'- 8"	250	2.4	5'-10 "	90	1.2
	42"	13'- 2 "	6'- 7 "	7'-10"	11'- 1"	304	3.0	6'- 8 "	109	1.5
	48"	15'- 4 "	7'- 3 "	9'- 4"	13'- 2 "	369	4.0	7'- 7 "	142	2.0
	54"	17'- 1"	7'-11 "	10'- 4"	14'- 7 "	429	4.7	8'- 8"	170	2.5
	60"	18'- 9"	8'- 7 "	11'- 4"	16'- 0 "	484	5.6	9'- 6 "	194	2.9
	66"	20'- 5"	9'- 3 "	12'- 4"	17'- 5 "	550	6.5	10'- 1 "	217	3.3
	72"	22'- 1 "	9'-11 "	13'- 4"	18'-10 "	614	7.5	10'- 9 "	239	3.7
3:1	12"	6'- 2"	3'- 1 "	4'- 3"	6'- 0"	118	0.9	2'- 0 "	24	0.3
	15"	7'- 2 "	3'- 5 "	5'- 0"	7'- 0 "	142	1.1	2'- 6"	31	0.4
	18"	8'- 3 "	3'- 9 "	5'- 9"	8'- 1 "	179	1.4	3'- 1"	46	0.5
	21"	9'- 4 "	4'- 1 "	6'- 6"	9'- 2 "	197	1.7	3'- 6 "	53	0.7
	24"	10'- 7 "	4'- 7"	7'- 3"	10'- 3"	227	2.1	4'- 1 "	65	0.8
	27"	11'- 8 "	4'-11"	8'- 0"	11'- 3 "	255	2.4	4'- 6 "	75	1.0
	30"	12'- 9 "	5'- 3"	8'- 9"	12'- 4 "	298	2.8	5'- 0"	86	1.2
	33"	13'-10 "	5'- 7"	9'- 6"	13'- 5 "	322	3.2	5'- 4 "	94	1.3
	36"	14'-11 "	5'-11 "	10'- 3"	14'- 6"	355	3.7	5'-10 "	108	1.5
	42"	17'- 1 "	6'- 7 "	11'- 9"	16'- 7 "	441	4.6	6'- 8 "	133	2.0
	48"	20'- 0 "	7'- 3 "	14'- 0"	19'- 9 "	542	6.2	7'- 7 "	176	2.7
	54"	22'- 3"	7'-11 "	15'- 6"	21'-11"	626	7.5	8'- 8"	211	3.3
	60"	24'- 5"	8'- 7 "	17'- 0"	24'- 0 "	725	8.9	9'- 6 "	246	3.9
	66"	26'- 7"	9'- 3 "	18'- 6"	26'- 2"	821	10.4	10'- 1 "	274	4.5
	72"	28'- 9 "	9'-11 "	20'- 0"	28'- 3 "	930	12.0	10'- 9 "	309	5.1
4:1	12"	7'- 7"	3'- 1 "	5'- 8"	8'- 0 "	156	1.2	2'- 0 "	28	0.3
	15"	8'-10 "	3'- 5 "	6'- 8"	9'- 5 "	183	1.5	2'- 6"	36	0.5
	18"	10'- 2 "	3'- 9 "	7'- 8"	10'-10"	228	1.9	3'- 1"	52	0.6
	21"	11'- 6 "	4'- 1 "	8'- 8"	12'- 3"	264	2.3	3'- 6 "	63	0.8
	24"	13'- 0 "	4'- 7"	9'- 8"	13'- 8"	301	2.8	4'- 1 "	75	1.0
	27"	14'- 4 "	4'-11"	10'- 8"	15'- 1"	339	3.4	4'- 6 "	87	1.2
	30"	15'- 8 "	5'- 3"	11'- 8"	16'- 6"	394	3.9	5'- 0"	99	1.4
	33"	17'- 0 "	5'- 7"	12'- 8"	17'-11"	432	4.5	5'- 4 "	112	1.7
	36"	18'- 4 "	5'-11 "	13'- 8"	19'- 4"	479	5.2	5'-10 "	128	1.9
	42"	21'- 0 "	6'- 7 "	15'- 8"	22'- 1 "	587	6.6	6'- 8 "	158	2.5
	48"	24'- 8 "	7'- 3 "	18'- 8"	26'- 4 "	738	8.9	7'- 7 "	211	3.3
	54"	27'- 5"	7'-11 "	20'- 8"	29'- 2 "	871	10.8	8'- 8"	257	4.1
	60"	30'- 1"	8'- 7 "	22'- 8"	32'- 0 "	999	12.8	9'- 6 "	297	4.9
	66"	32'- 9"	9'- 3 "	24'- 8"	34'-10 "	1139	14.9	10'- 1 "	340	5.6
	72"	35'- 5 "	9'-11 "	26'- 8"	37'- 8 "	1290	17.3	10'- 9 "	378	6.4
6:1	12"	10'- 5"	3'- 1 "	8'- 6"	12'- 0 "	223	1.9	2'- 0 "	32	0.4
	15"	12'- 2 "	3'- 5 "	10'- 0"	14'- 1 "	273	2.5	2'- 6"	43	0.6
	18"	14'- 0 "	3'- 9 "	11'- 6"	16'- 3 "	336	3.2	3'- 1"	61	0.8
	21"	15'-10 "	4'- 1 "	13'- 0"	18'- 4 "	396	3.9	3'- 6 "	76	1.1
	24"	17'-10 "	4'- 7"	14'- 6"	20'- 6"	450	4.8	4'- 1 "	91	1.4
	27"	19'- 8 "	4'-11"	16'- 0"	22'- 7 "	519	5.7	4'- 6 "	108	1.6
	30"	21'- 6 "	5'- 3"	17'- 6"	24'- 9"	595	6.6	5'- 0"	124	2.0
	33"	23'- 4 "	5'- 7"	19'- 0"	26'-10 "	674	7.7	5'- 4 "	143	2.3
	36"	25'- 2 "	5'-11 "	20'- 6"	29'- 0"	737	8.8	5'-10 "	162	2.7
	42"	28'-10 "	6'- 7 "	23'- 6"	33'- 2 "	920	11.3	6'- 8 "	202	3.5
	48"	34'- 0 "	7'- 3 "	28'- 0"	39'- 7 "	1189	15.5	7'- 7 "	274	4.6

(1) Quantities shown are for concrete pipe and will increase slightly for metal pipe installations.

(2) For vehicle safety, curbs shall project no more than 3" above finished grade. Curb heights shall be reduced, if necessary, to meet these requirements. No changes will be made in quantities and no additional compensation will be allowed for this work.

(3) Provide a 1'-0" footing as shown where required to maintain 4" Min cover for pipes.

(4) Quantities shown are for one structure end only (one headwall).

(5) Min Length = $6" + 3" \times \left(\frac{12 \times H - 7}{12 \times L}\right)$

Max Length = $12 \times H - 3" \times \left(\frac{12 \times H - 7}{12 \times L}\right) - 1"$

(6) Lengths of wings based on SL:1 Slope along this line.

TABLE OF REINFORCING STEEL (4)

Bar	Size	Spa	No.
A	# 4	1'-0"	~
B	# 3	1'-6"	~
CL	# 4	1'-0"	~
CS	# 4	1'-0"	~
D	# 3	1'-0"	~
E	# 5	~	4
F	# 5	~	~
G	# 3	~	2
SL	# 4	~	3
SS	# 4	~	3
V	# 4	1'-0"	~
WL	# 5	~	2
WS	# 5	~	2

TABLE OF CONSTANT DIMENSIONS

DIA OF PIPE,D	G	K	H
12"	9"	1'- 0"	2'- 0"
15"	11"	1'- 0"	2'- 3"
18"	1'- 2"	1'- 0"	2'- 6"
21"	1'- 4"	1'- 0"	2'- 9"
24"	1'- 7"	1'- 0"	3'- 0"
27"	1'- 8"	1'- 0"	3'- 3"
30"	1'-10"	1'- 0"	3'- 6"
33"	1'-11"	1'- 0"	3'- 9"
36"	2'- 1"	1'- 0"	4'- 0"
42"	2'- 4"	1'- 0"	4'- 6"
48"	2'- 7"	1'- 3"	5'- 3"
54"	3'- 0"	1'- 3"	5'- 9"
60"	3'- 3"	1'- 3"	6'- 3"
66"	3'- 3"	1'- 3"	6'- 9"
72"	3'- 4"	1'- 3"	7'- 3"

GENERAL NOTES:

Designed according to current AASHTO Standard and Interim Specifications.

Reinforcing steel shall be placed with the center of the outside layer of bars 2" from the surface of the concrete.

All reinforcing steel shall be Grade 60.

All concrete shall be Class "C" and shall have a minimum compressive strength of 3600 psi.

No bridge rails of any type may be mounted directly to these culvert headwalls.

DISCLAIMER:
The use of this standard is governed by the "Texas Engineering Practice Act". No warranty of any kind is made by TxDOT for any purpose whatsoever. TxDOT assumes no responsibility for the conversion of this standard to other formats or for incorrect results or damages resulting from its use.

REFERENCE ONLY

THIS STANDARD DETAIL IS INCLUDED FOR INFORMATIONAL PURPOSES ONLY. REVISIONS BY OTHERS MAY OCCUR. REFER TO THE TEXAS DEPARTMENT OF TRANSPORTATION FOR THE LATEST REVISIONS TO THIS AND OTHER APPLICABLE STANDARDS.

Texas Department of Transportation
Bridge Division

CONCRETE HEADWALLS WITH FLARED WINGS FOR 30° SKEW PIPE CULVERTS

CH-FW-30

FILE: chfw30se.dgn	DN: TxDOT	CK: TxDOT	DW: TxDOT	CK: GAF
©TxDOT May 2005	DISTRICT	FEDERAL AID PROJECT		SHEET
REVISIONS				
	COUNTY	CONTROL	SECT	JOB	HIGHWAY

CITY OF SACHSE, TEXAS
DEPARTMENT OF ENGINEERING

STANDARD CONSTRUCTION DETAILS
MISCELLANEOUS DETAILS

TXDOT HEADWALL DETAILS

APPROVED:

DATE: NOVEMBER 2008 | REVISED:

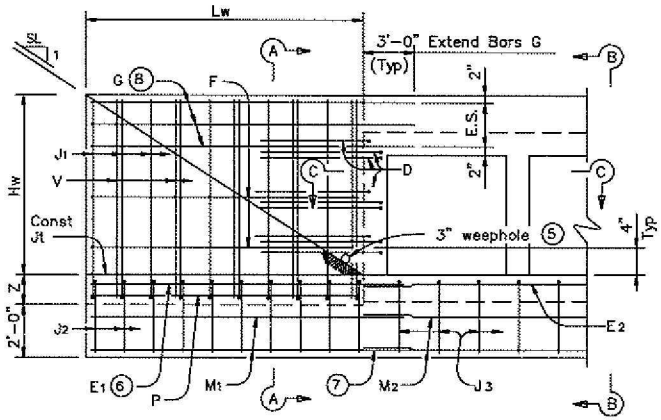

PARTIAL ELEVATION

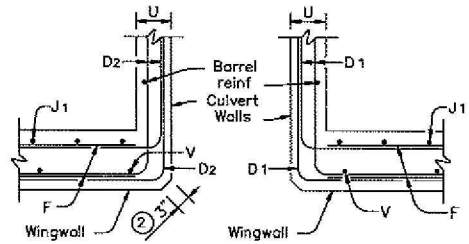

SECTION C–C

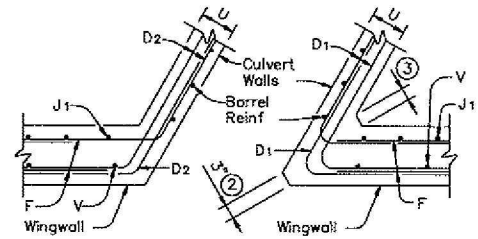

SECTION C–C

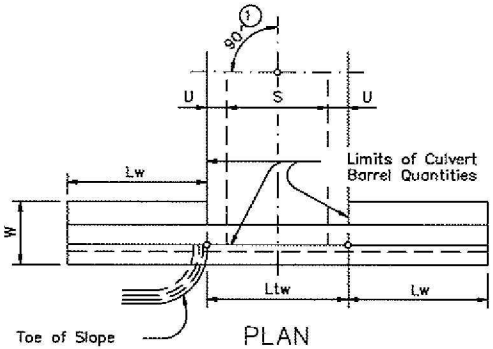

PLAN

DETAILS FOR NON–SKEWED BOX CULVERTS

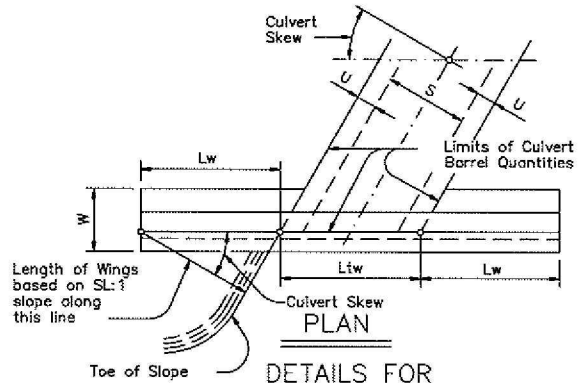

PLAN

DETAILS FOR SKEWED BOX CULVERTS

(Showing 30° Skew)

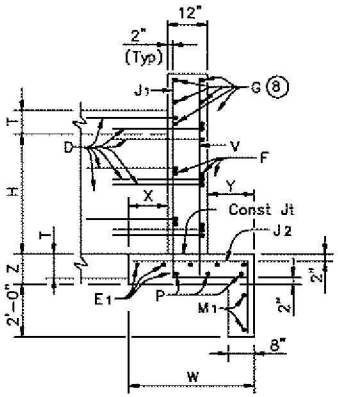

SECTION A–A

(Showing Wing Reinf)

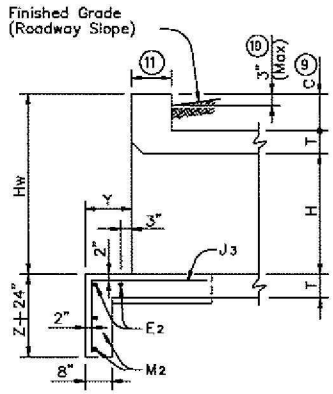

SECTION B–B

(Showing Toewall Reinf)

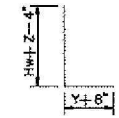

BARS J1

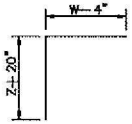

BARS J2

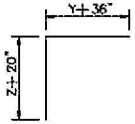

BARS J3

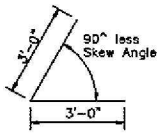

BARS D1

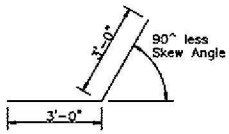

BARS D2

BARS V

Texas Department of Transportation
Bridge Division

CONCRETE WINGWALLS
WITH PARALLEL WINGS FOR
SKEWED AND NON–SKEWED
BOX CULVERTS

PW

FILE: pwstdc01.dgn	DN: GAF	CK: CAT	DW: TxDOT	CK: GAF
©TxDOT May 2005	DISTRICT	FEDERAL AID PROJECT	SHEET
REVISIONS 06–07: Size & No. of Bars D. Size & Lgth of Bars G.	COUNTY	CONTROL	SECT	JOB	HIGHWAY

CITY OF SACHSE, TEXAS
DEPARTMENT OF ENGINEERING

STANDARD CONSTRUCTION DETAILS
MISCELLANEOUS DETAILS

TXDOT HEADWALL DETAILS

APPROVED:

DATE: NOVEMBER 2008 | REVISED:

DISCLAIMER:
The use of this standard is governed by the "Texas Engineering Practice Act". No warranty of any kind is made by TxDOT for any purpose whatsoever. TxDOT assumes no responsibility for the conversion of this standard to other formats or for incorrect results or damages resulting from its use.

REFERENCE ONLY

THIS STANDARD DETAIL IS INCLUDED FOR INFORMATIONAL PURPOSES ONLY. REVISIONS BY OTHERS MAY OCCUR. REFER TO THE TEXAS DEPARTMENT OF TRANSPORTATION FOR THE LATEST REVISIONS TO THIS AND OTHER APPLICABLE STANDARDS.

TABLE OF DIMENSIONS & REINFORCING STEEL
(Wings for One Structure End)

Dimensions					Variable Reinforcing				Estimated Quantities per ft of wing (2~Wings) ④		Estimated Quantities per ft of Toewall (1~Toewall)	
					Bars J1		Bars J2					
Maximum Wingwall Height Hw	W	X	Y	Z	Size	Spa	Size	Spa	Reinf (Lb/Ft)	Conc (CY/Ft)	Reinf (Lb/Ft)	Conc (CY/Ft)
2'-6"	2'-10"	10"	1'- 0"	7"	#4	1'-0"	#4	1'-0"	43.13	0.406	6.85	0.071
2'-9"	2'-10"	10"	1'- 0"	7"	#4	1'-0"	#4	1'-0"	43.80	0.424	6.85	0.071
3'-0"	2'-10"	10"	1'- 0"	7"	#4	1'-0"	#4	1'-0"	44.47	0.444	6.85	0.071
3'-3"	2'-10"	10"	1'- 0"	7"	#4	1'-0"	#4	1'-0"	47.81	0.462	6.85	0.071
3'-6"	2'-10"	10"	1'- 0"	7"	#4	1'-0"	#4	1'-0"	48.48	0.480	6.85	0.071
4'-0"	3'- 2"	1'- 2"	1'- 0"	7"	#4	1'-0"	#4	1'-0"	50.26	0.532	6.85	0.071
4'-6"	3'- 2"	1'- 2"	1'- 0"	7"	#4	1'-0"	#4	1'-0"	54.27	0.568	6.85	0.071
5'-0"	3'- 9"	1'- 7"	1'- 2"	7"	#4	1'-0"	#4	1'-0"	57.94	0.632	6.96	0.075
5'-6"	3'- 9"	1'- 7"	1'- 2"	7"	#4	1'-0"	#4	1'-0"	61.95	0.668	6.96	0.075
6'-0"	4'- 4"	2'- 0"	1'- 4"	7"	#5	1'-0"	#5	1'-0"	75.16	0.730	7.07	0.078
6'-6"	4'- 4"	2'- 0"	1'- 4"	7"	#5	1'-0"	#5	1'-0"	79.54	0.768	7.07	0.078
7'-0"	5'- 0"	2'- 3"	1'- 9"	8"	#5	1'-0"	#5	1'-0"	86.65	0.864	8.07	0.093
7'-6"	5'- 0"	2'- 3"	1'- 9"	8"	#5	1'-0"	#5	1'-0"	91.03	0.902	8.07	0.093
8'-0"	5'- 6"	2'- 8"	1'-10"	8"	#5	6"	#5	6"	133.54	0.962	8.13	0.095
8'-6"	5'- 6"	2'- 8"	1'-10"	8"	#5	6"	#5	6"	138.96	1.000	8.13	0.095
9'-6"	6'- 0"	2'-10"	2'- 2"	9"	#5	6"	#5	6"	151.43	1.136	8.41	0.110
10'-6"	6'- 5"	3'- 0"	2'- 5"	9"	#6	6"	#5	6"	190.76	1.234	8.57	0.117
11'-6"	7'- 2"	3'- 6"	2'- 8"	11"	#6	6"	#6	6"	224.62	1.438	9.52	0.140
12'-6"	7'- 8"	3'- 9"	2'-11"	1'- 0"	#7	6"	#6	6"	277.90	1.592	9.74	0.157
13'-6"	8'- 2"	4'- 0"	3'- 2"	1'- 2"	#8	6"	#6	6"	343.21	1.804	10.02	0.186
14'-6"	8'-10"	4'- 5"	3'- 5"	1'- 4"	#9	6"	#6	6"	427.43	2.046	10.30	0.218
15'-6"	9'- 6"	4'-10"	3'- 8"	1'- 6"	#9	6"	#7	6"	484.01	2.302	11.2 4	0.253
16'-0"	9'-11"	5'- 0"	3'-11"	1'- 7"	#9	6"	#7	6"	500.21	2.448	11.47	0.279

TABLE OF WINGWALL REINFORCING (2~Wings)

Bar	Size	No.	Spa
D1	#6	~	1'-0"
D2	#6	~	1'-0"
E1	#4	~	1'-0"
F	#4	~	1'-0"
G	#6	~	1'-0"
M1	#4	4	~
P	#4	~	1'-0"
V	#4	~	1'-0"

TABLE OF TOEWALL REINFORCING

Bar	Size	No	Spa
J3	#4	~	1'-0"
M2	#4	2	~
E2	#4	~	1'-0"

1. Skew Angle = 0^
2. At discharge end, chamfer may be ?".
3. For 15^ Skew ~ 1"
   For 30^ Skew ~ 2"
   For 45^ Skew ~ 3"
4. Quantities shown are for two wings. To determine total quantities for two wings, multiply the tabulated values by Lw.
5. Provide weepholes for Hw = 5'-0" and greater. Fill around weepholes with coarse gravel.
6. Extend Bars E 1'-6" minimum into the bottom slab of the culvert.
7. Lap Bars M 11'-6" minimum with Bars M . 2
8. Bars G shall be equally spaced at 8" maximum, placed as shown. There shall be at least 4 Bars G per wing.
9. 0" min to 5'-0" max. For T6 or C6 Rail, see T6-CM standard for additional details. For all other rail types, refer to the RAC standard. For curbs without rail and greater than 1'-0" high, see ECD standard for additional details. Estimated curb heights are shown elsewhere in the plans.
10. For vehicle safety, the following requirements must be met:
    - For structures without bridge rail, curbs shall project no more than 3" above finished grade.
    - For structures with bridge rail, curbs shall be flush with finished grade.

    Curb heights shall be reduced, if necessary, to meet the above requirements. No changes will be made in quantities and no additional compensation will be allowed for this work.
11. 1'-0" typical. 2'-0" typical when RAC standard is referenced elsewhere in the plans.

WING DIMENSION CALCULATIONS:

Formulas: (All values are in Feet)

Hw = H + T + C

Lw = (Hw) (SL) Cosine ( ) V

For Cast-in-place culverts:

Ltw = [(N) (S) (N 1)+(U)] (Cosine) V

For Precast culverts:

Ltw = [(N) (2 U S) + (N 1)+(0.5')] (Cosine) V

Total Wingwall Area (Two Wings ~ S.F.)

= (2) (Hw) (Lw)

Hw = Height of Wingwall
Lw = Length of Wingwall
Ltw = Culvert Toewall Length
N = Number of Culvert Spans
SL:1 = Channel Slope ratio. (Horizontal: 1 Vertical, Usual value is 2:1)
V = Culvert Skew

See applicable box culvert standard for S, H, T and U values.

GENERAL NOTES:

Designed according to current AASHTO Standard and Interim Specifications.

All reinforcing steel shall be Grade 60.

All concrete shall be Class "C" and shall have a minimum compressive strength of 3600 psi.

All reinforcing bars shall be adjusted to provide a minimum of 1 ?" clear cover.

When structure is founded on solid rock, depth of toewalls for culverts and wingwalls may be reduced or eliminated as directed by the Engineer.

See BCS sheet for additional dimensions and information.

The quantities for concrete and reinforcing steel resulting from the formulas given on this sheet are for Contractor's information only.

Texas Department of Transportation
Bridge Division

CONCRETE WINGWALLS WITH PARALLEL WINGS FOR SKEWED AND NON-SKEWED BOX CULVERTS

PW

FILE: pwsfde01.dgn	DN: CAF	CK: CAT	DW: TxDOT	CK: CAF
©TxDOT May 2005	DISTRICT	FEDERAL AID PROJECT		SHEET
REVISIONS 08-07: Size & No. of Bars D. Size & Lgth of Bars G.	COUNTY	CONTROL	SECT	JOB	HIGHWAY

CITY OF SACHSE, TEXAS
DEPARTMENT OF ENGINEERING

STANDARD CONSTRUCTION DETAILS
MISCELLANEOUS DETAILS

TXDOT HEADWALL DETAILS

APPROVED:

DATE: NOVEMBER 2008 | REVISED:

DISCLAIMER:
The use of this standard is governed by the "Texas Engineering Practice Act". No warranty of any kind is made by TxDOT for any purpose whatsoever. TxDOT assumes no responsibility for the conversion of this standard to other formats or for incorrect results or damages resulting from its use.

REFERENCE ONLY

THIS STANDARD DETAIL IS INCLUDED FOR INFORMATIONAL PURPOSES ONLY. REVISIONS BY OTHERS MAY OCCUR. REFER TO THE TEXAS DEPARTMENT OF TRANSPORTATION FOR THE LATEST REVISIONS TO THIS AND OTHER APPLICABLE STANDARDS.

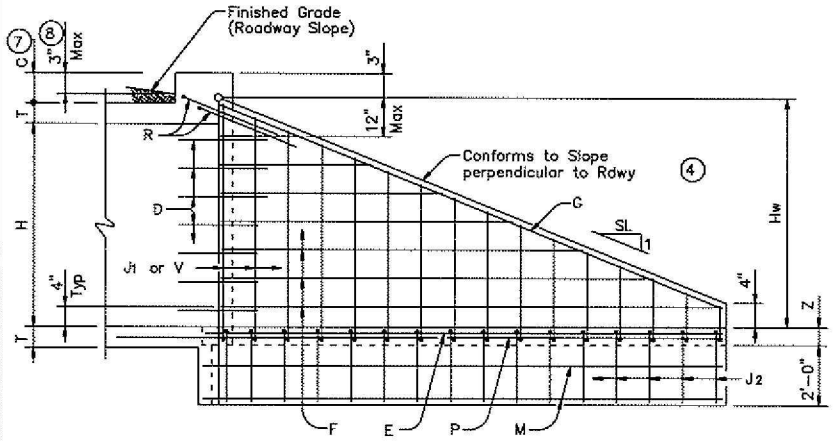

INSIDE ELEVATION

(Showing reinforcing. Culvert and Culvert Toewall reinforcing not shown for clarity.)

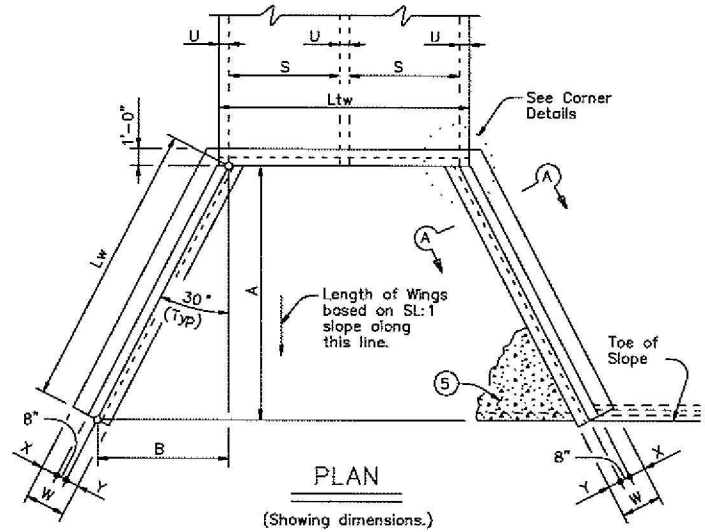

PLAN

(Showing dimensions.)

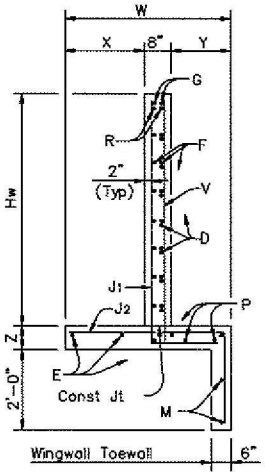

SECTION A–A

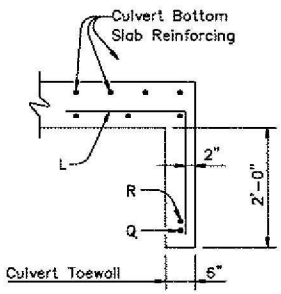

SECTION B–B 5

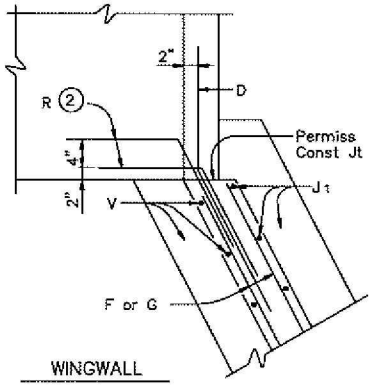

WINGWALL

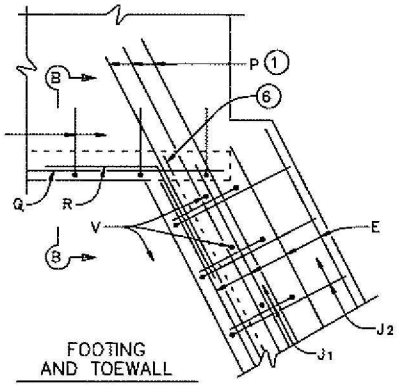

FOOTING
AND TOEWALL

CORNER DETAILS

(Culvert and Culvert Toewall reinforcing not shown for clarity.)

Texas Department of Transportation
Bridge Division

CONCRETE WINGWALLS
WITH FLARED WINGS FOR
0° SKEW BOX CULVERTS

FW–0

FILE: fw-0side.dgn	DN: GAF	CK: CAT	DW: TxDOT	CK: GAF
©TxDOT May 2005	DISTRICT	FEDERAL AID PROJECT		SHEET
REVISIONS	COUNTY	CONTROL	SECT	JOB	HIGHWAY

CITY OF SACHSE, TEXAS
DEPARTMENT OF ENGINEERING

STANDARD CONSTRUCTION DETAILS
MISCELLANEOUS DETAILS

TXDOT HEADWALL DETAILS

APPROVED:

DATE: NOVEMBER 2008 | REVISED:

DISCLAIMER:
The use of this standard is governed by the "Texas Engineering Practice Act". No warranty of any kind is made by TxDOT for any purpose whatsoever. TxDOT assumes no responsibility for the conversion of this standard to other formats or for incorrect results or damages resulting from its use.

REFERENCE ONLY

THIS STANDARD DETAIL IS INCLUDED FOR INFORMATIONAL PURPOSES ONLY. REVISIONS BY OTHERS MAY OCCUR. REFER TO THE TEXAS DEPARTMENT OF TRANSPORTATION FOR THE LATEST REVISIONS TO THIS AND OTHER APPLICABLE STANDARDS.

TABLE OF DIMENSIONS & REINFORCING STEEL
(Wings for One Structure End)

Dimensions					Variable Reinforcing				Estimated Quantities per ft of wing length (2~Wings) (3)	
Maximum Wingwall Height Hw	W	X	Y	Z	Bars J 1		Bars J 2			
					Size	Spa	Size	Spa	Reinf (Lb/Ft)	Conc (CY/Ft)
2'-6"	2'- 5"	1'- 0"	9"	7"	#4	1'-0"	#4	1'-0"	33.73	0.248
3'-0"	2'- 5"	1'- 0"	9"	7"	#4	1'-0"	#4	1'-0"	37.07	0.261
3'-6"	2'- 5"	1'- 0"	9"	7"	#4	1'-0"	#4	1'-0"	37.74	0.273
4'-0"	2'- 5"	1'- 0"	9"	7"	#4	1'-0"	#4	1'-0"	38.41	0.285
4'-6"	3'- 2"	1'- 6"	1'- 0"	7"	#4	1'-0"	#4	1'-0"	41.75	0.330
5'-0"	3'- 2"	1'- 6"	1'- 0"	7"	#4	1'-0"	#4	1'-0"	45.09	0.343
5'-6"	3'- 2"	1'- 6"	1'- 0"	7"	#4	1'-0"	#4	1'-0"	45.75	0.355
6'-0"	3'- 2"	1'- 6"	1'- 0"	7"	#4	1'-0"	#4	1'-0"	46.42	0.367
7'-0"	3'- 8"	1'- 9"	1'- 3"	7"	#4	1'-0"	#4	1'-0"	52.77	0.414
8'-0"	4'- 2"	2'- 0"	1'- 6"	8"	#5	1'-0"	#4	1'-0"	60.19	0.486
9'-0"	4'- 8"	2'- 3"	1'- 9"	8"	#4	6"	#4	6"	81.49	0.535
10'-0"	5'- 2"	2'- 6"	2'- 0"	8"	#5	6"	#4	6"	97.25	0.584
11'-0"	5'- 8"	2'- 9"	2'- 3"	8"	#6	6"	#5	6"	133.65	0.634
12'-0"	6'- 2"	3'- 0"	2'- 6"	9"	#7	6"	#5	6"	162.29	0.721
13'-0"	6'- 8"	3'- 3"	2'- 9"	11"	#7	6"	#5	6"	178.80	0.856
14'-0"	7'- 2"	3'- 6"	3'- 0"	1'- 0"	#8	6"	#5	6"	216.78	0.959
15'-0"	7'- 8"	4'- 0"	3'- 0"	1'- 1"	#9	6"	#6	6"	283.06	1.068
16'-0"	8'- 2"	4'- 6"	3'- 0"	1'- 3"	#9	6"	#6	6"	297.02	1.234

TABLE OF WINGWALL REINFORCING
(2~Wings)

Bar	Size	No.	Spa
D	#5	~	1'-0"
E	#4	~	1'-0"
F	#4	~	1'-0"
G	#6	4	~
M	#4	4	~
P	#4	~	1'-0"
R	#5	6	~
V	#4	~	1'-0"

TABLE OF ESTIMATED CULVERT TOEWALL QUANTITIES

Bar	Size	No.	Spa
L	#4	~	1'-6"
Q	#4	1	~
Reinf (Lb/Ft)			2.45
Conc (CY/Ft)			0.037

(1) Extend Bars P 3'-0" minimum into bottom slab of Box Culvert.

(2) Adjust to fit as necessary to maintain 1 " clear cover and 4" minimum between bars.

(3) Quantities shown are based on an average wing height for two wings (one structure end). To determine total quantities for two wings multiply the tabulated values by Lw.

(4) Recommended values of Slope are: 2:1, 3:1, 4:1, & 6:1.

(5) When shown elsewhere on the plans, a 5" deep concrete riprap shall be constructed. Unless otherwise shown on the plans or directed by the Engineer, the riprap shall have a 6" wide by 1'-6" deep reinforced concrete toewall along all edges adjacent to natural ground; the toewall shall be reinforced by extending typical riprap reinforcing into the toewall; construction joints or grooved joints, oriented in the direction of flow, shall extend across the full distance of the riprap, at intervals of approximately 20'. When such riprap is provided, the culvert toewall shown in SECTION B-B will not be required. Payment for riprap shall be as required by Item 432, "Riprap".

(6) At Contractor's option, Culvert Toewall may be ended flush with Wingwall Toewall. Adjust reinforcing from that shown as necessary.

(7) 0" min to 5'-0" max. For T6 or C6 Rail, see T6-CM standard for additional details. For all other rail types, refer to the RAC standard. For curbs without rail and greater than 1'-0" high, see ECD standard for additional details. Estimated curb heights are shown elsewhere in the plans.

(8) For vehicle safety, curb heights and wall heights shall be reduced, if necessary, to provide a maximum 3" projection above finished grade. No changes will be made in quantities and no additional compensation will be allowed for this work.

GENERAL NOTES:

Designed according to current AASHTO Standard and Interim Specifications.

All reinforcing steel shall be Grade 60.

All concrete shall be Class "C" and shall have a minimum compressive strength of 3600 psi.

All reinforcing bars shall be adjusted to provide a minimum of 1 ?" clear cover.

When structure is founded on solid rock, depth of toewalls for culverts and wingwalls may be reduced or eliminated as directed by the Engineer.

See BCS sheet for additional dimensions and information.

The quantities for concrete and reinforcing steel resulting from the formulas given on this sheet are for Contractor's information only.

WING DIMENSION CALCULATIONS:

Formulas: (All values are in Feet)

Hw = H + T + C −0.250'

A = (Hw −0.333') (SL)

B = (A) Tangent (30^)

Lw = (A) ÷Cosine (30^)

For Cast-in-place culverts:

Ltw = (N) (S) (N 1)+(U)

For Precast culverts:

Ltw = (N) (2U S) (N 1)−(0.500')

Total Wingwall Area (Two Wings ~ S.F.)=(Hw 0.333')÷(Lw)

Hw = Height of Wingwall
SL:1 = Side Slope Ratio (Horizontal:1 Vertical)
Lw = Length of Wingwall
Ltw = Culvert Toewall Length
N = Number of Culvert Spans

See applicable box culvert standard for H, S, T, and U values.

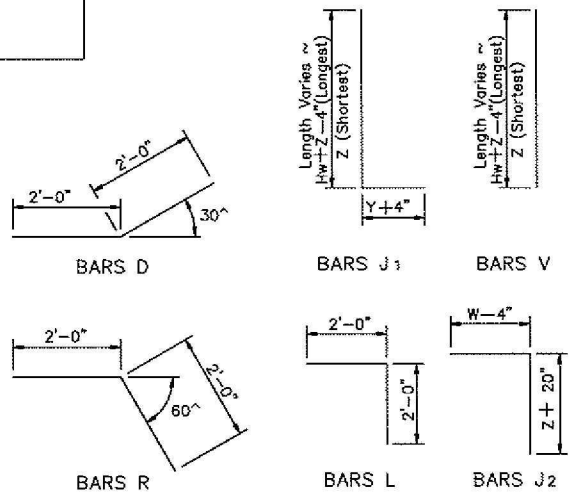

REFERENCE ONLY

THIS STANDARD DETAIL IS INCLUDED FOR INFORMATIONAL PURPOSES ONLY. REVISIONS BY OTHERS MAY OCCUR. REFER TO THE TEXAS DEPARTMENT OF TRANSPORTATION FOR THE LATEST REVISIONS TO THIS AND OTHER APPLICABLE STANDARDS.

DISCLAIMER:
The use of this standard is governed by the "Texas Engineering Practice Act". No warranty of any kind is made by TxDOT for any purpose whatsoever. TxDOT assumes no responsibility for the conversion of this standard to other formats or for incorrect results or damages resulting from its use.

Texas Department of Transportation
Bridge Division

CONCRETE WINGWALLS
WITH FLARED WINGS FOR
0° SKEW BOX CULVERTS

FW-0

FILE: fw-0skde.dgn	DN: GAF	CK: CAT	DW: TxDOT	CK: GAF
©TxDOT May 2005	DISTRICT	FEDERAL AID PROJECT		SHEET
REVISIONS	COUNTY	CONTROL	SECT	JOB	HIGHWAY

CITY OF SACHSE, TEXAS
DEPARTMENT OF ENGINEERING

STANDARD CONSTRUCTION DETAILS
MISCELLANEOUS DETAILS

TXDOT HEADWALL DETAILS

APPROVED:

DATE: NOVEMBER 2008 | REVISED:

SECTION 6-D
CONSTRUCTION SIGNS & BARRICADES

CITY OF SACHSE, TEXAS DEPARTMENT OF ENGINEERING		
STANDARD CONSTRUCTION DETAILS MISCELLANEOUS DETAILS		
CONSTRUCTION SIGNS & BARRICADES		
APPROVED:		
DATE: NOVEMBER 2008	REVISED:	Page 1

CONSTRUCTION SIGN NOTES

1. ALL SIGN, SIGN COLOR, SIGN LETTERING AND SIGN REFLECTORIZATION SHALL CONFORM WITH THE *TEXAS MANUAL ON TRAFFIC CONTROL DEVICES FOR STREETS AND HIGHWAYS*. THE CONTRACTOR SHALL MAINTAIN EACH SIGN IN A CLEAN AND GOOD CONDITION.

2. CONSTRUCTION SIGNS SHALL BE MADE FROM WOOD OR METAL. THE DESIGNATION OF METAL AND WOOD AS PRIMARY MATERIALS FOR SIGNS SHALL NOT BE INTERPRETED TO EXCLUDE OTHER SUITABLE RIGID MATERIALS NOW OR HERE-AFTER AVAILABLE.

3. SIGNS SHALL BE REMOVED UPON COMPLETION OF THE WORK. INDIVIDUAL WARNING SIGNS SHALL BE REMOVED, TURNED AWAY FROM THE VIEW OF TRAFFIC, OR COVERED WHENEVER THE SPECIFIC DANGER OF WHICH THE PARTICULAR SIGN WARNS HAS CEASED TO EXIST, EITHER PERMANENTLY OR TEMPORARILY. THE SIGN MUST BE PROMPTLY REPLACED, TURNED INTO VIEW, OR UNCOVERED WHEN THE SITUATION AGAIN BECOMES A POTENTIAL DANGER.

4. SIGNS ERECTED ON PORTABLE SUPPORTS FOR USE ON CONSTRUCTION PROJECTS NORMALLY MEAN SIGNS WHICH ARE USED DURING THE DAY TO WARN OR GUIDE TRAFFIC THROUGH AND OR AROUND THE ACTUAL CONSTRUCTION AREA, BUT AT THE END OF THE WORKDAY SUCH SIGNS ARE EITHER REMOVED OR TURNED AWAY FROM THE VIEW OF TRAFFIC. PORTABLE SUPPORTS SHALL BE AS SHOWN OR AS APPROVED BY THE ENGINEER. THE BOTTOM OF THE SIGN SHALL BE A MINIMUM OF ONE (1) FOOT ABOVE THE PAVEMENT EDGE. SIGNS REQUIRED FOR NIGHT TIME USAGE SHOULD NOT NORMALLY BE MOUNTED ON PORTABLE SUPPORTS EXCEPT WHEN APPROVED BY THE ENGINEER.

5. SIGNS ERECTED ON FIXED SUPPORTS FOR USE ON CONSTRUCTION PROJECTS NORMALLY MEAN SIGNS THAT ARE TO REMAIN IN PLACE FOR BOTH DAY AND NIGHT USAGE TO REGULATE, WARN AND GUIDE TRAFFIC IN ADVANCE OF AND WITHIN THE LIMITS OF THE PROJECT INCLUDING THE CROSSROAD APPROACHES. HOWEVER, UNDER CERTAIN CONDITIONS, SUCH AS WHERE A SIGN MAY BE REQUIRED FOR A FEW DAYS DURATION AND THEN IS NO LONGER NEEDED, OR WHERE A SIGN IS MOVED FROM LOCATION TO LOCATION EVERY FEW DAYS OR WHERE IT IS NOT PRACTICAL OR DESIRABLE TO PROVIDE A FIXED MOUNTING, SUCH SIGNS MAY BE ERECTED ON A TEMPORARY TYPE OF SUPPORT. TEMPORARY SUPPORTS SHALL BE AS SHOWN OR AS APPROVED BY THE ENGINEER. SIGNS ERECTED ON TEMPORARY SUPPORTS SHOULD BE AT A MINIMUM HEIGHT OF 3 FEET. SIGNS ERECTED ON FIXED SUPPORTS SHOULD BE AT A MINIMUM OF SEVEN (7) FEET, REGARDLESS OF THE TYPE OF SUPPORT USED. REGULATORY SIGNS SHOULD NOT BE ERECTED AT A HEIGHT LESS THAN SEVEN (7) FOOT MINIMUM SPECIFIED ABOVE UNLESS A LOWER HEIGHT IS APPROVED BY THE ENGINEER. POSTS FOR FIXED SUPPORTS SHOULD BE SET IN THE GROUND WITHOUT CONCRETE FOOTINGS.

6. WHERE PORTABLE OR TEMPORARY SUPPORTS REQUIRE THE USE OF WEIGHTS TO KEEP A SIGN OR BARRICADE FROM TURNING OVER. THE USE OF SOME TYPE OF SANDBAG IS RECOMMENDED. THE USE OF PIECES OF CONCRETE, ROCKS, IRON, STEEL OR OTHER SOLID OBJECTS WILL NOT BE PERMITTED.

CONSTRUCTION PAVEMENT MARKINGS

1. WHEN REQUIRED ELSEWHERE IN THE PLANS, THE CONTRACTOR WILL BE RESPONSIBLE FOR MAINTAINING PAVEMENT MARKINGS ON ALL ROADWAYS THAT ARE OPEN TO TRAFFIC WITHIN THE LIMITS OF THE PROJECT. ON PROJECTS INVOLVING ROADWAY SURFACING WHICH WILL REQUIRE PAVEMENT MARKING FOR CONTROL OF TRAFFIC DURING CONSTRUCTION. THE MARKINGS MAY INCLUDE BOTH STANDARD AND ABBREVIATED MARKINGS AS DEFINED BELOW:

   A. STANDARD PAVEMENT MARKINGS - STANDARD MARKINGS PLACED IN CONFORMANCE WITH THE REQUIREMENTS OF THE *TEXAS MUTCD*. SUCH MARKINGS SHOULD BE PLACED ON ALL ROADWAYS OPEN TO TRAFFIC DURING CONSTRUCTION, INCLUDING NEW PAVEMENT, RESURFACING, DETOURS OR OTHER ROADWAYS WHERE CONSTRUCTION ACTIVITIES MAY HAVE COVERED OR OBLITERATED EXISTING MARKINGS. STANDARD MARKINGS SHOULD BE PLACED AS SOON AS POSSIBLE AND PRACTICAL. WHEN IT IS NOT PRACTICAL OR POSSIBLE TO PLACE STANDARD MARKINGS AT THE END OF EACH DAYS WORK, ABBREVIATED MARKINGS MAY BE UTILIZED FOR SHORT PERIODS UNTIL STANDARD MARKINGS CAN BE PLACED.

   B. ABBREVIATED PAVEMENT MARKINGS - ABBREVIATED PAVEMENT MARKINGS ARE SHORTER IN LENGTH THAN STANDARD MARKINGS. ABBREVIATED PAVEMENT MARKINGS MAY BE USED TO DELINEATE LANE CONTINUITY ONLY UNTIL SUCH TIME AS STANDARD MARKINGS CAN BE PLACED. THEY ARE NOT INTENDED TO SUBSTITUTE FOR STANDARD MARKINGS FOR PERIODS GREATER THAN TWO (2) WEEKS. TO SEPARATE TRAFFIC FLOWS IN OPPOSING DIRECTIONS, THE PAVEMENT MARKINGS SHALL BE YELLOW. WHITE PAVEMENT MARKINGS SHALL BE USED TO DELINEATE THE SEPARATION OF TRAFFIC FLOWS IN THE SAME DIRECTION.

   C. PAVEMENT MARKING MATERIALS - TEMPORARY PAVEMENT MARKING MAY BE ACCOMPLISHED BY USE OF STANDARD TRAFFIC PAVEMENT MARKING PAINT OR BY PAVEMENT MARKING TAPE (SCOTCHLANE OR STAMARK BRAND OR AS APPROVED BY THE ENGINEER). TEMPORARY PAVEMENT MARKINGS SHALL BE REMOVED IMMEDIATELY WHEN NO LONGER APPLICABLE.

2. WHEN ABBREVIATED PAVEMENT MARKINGS ARE USED, A DO NOT PASS SIGN SHALL BE USED TO MARK THE BEGINNING OF THE SECTION WHERE PASSING IS TO BE PROHIBITED AND A PASS WITH CARE SIGN SHALL BE USED TO MARK THE BEGINNING OF A SECTION WHERE PASSING IS PERMITTED.

REMOVAL OF PAVEMENT MARKINGS

1. REMOVAL OF PAVEMENT MARKINGS - INCLUDES CENTERLINE, BARRIER LINES, LANE LINES, EDGE LINES AND RAISED PAVEMENT MARKINGS.

2. IMMEDIATELY UPON OPENING A DETOUR TO TRAFFIC, ANY PAVEMENT MARKINGS ON THE EXISTING ORIGINAL ROADWAY IN THE DETOUR TRANSITION AREA THAT ARE NO LONGER APPLICABLE AND WHICH MAY CREATE CONFUSION OR DIRECT A MOTORIST TOWARD OR INTO THE CLOSED PORTION OF THE ROADWAY, SHALL BE REMOVED OR OBLITERATED. IN ADDITION, WHEN A DETOUR IS TO BE DISCONTINUED, ANY PAVEMENT MARKINGS USED TO TRANSITION TRAFFIC INTO THE DETOUR WHICH MAY CREATE CONFUSION OR DIRECT A MOTORIST INTO THE DISCONTINUED DETOUR SHALL LIKEWISE BE REMOVED OR OBLITERATED. THE ABOVE SHALL NOT APPLY TO DETOURS OF A SHORT TIME DURATION OF A FEW HOURS WHERE FLAGMEN OR SUFFICIENT CHANNELING DEVICES ARE USED TO OUTLINE THE DETOUR ROUTE AND THE DETOUR IS NOT TO BE MAINTAINED OVERNIGHT.

3. THE REMOVAL OF PAVEMENT MARKINGS SHALL BE AN INTEGRAL PART OF ESTABLISHING THE DETOUR. DETOURS SHALL BE PLANNED AND SCHEDULED WELL ENOUGH IN ADVANCE TO ALLOW ADEQUATE TIME TO COMPLETE ALL PHASES OF THE OPERATION PRIOR TO DARKNESS. IF INCLEMENT WEATHER OR DARKNESS BECOMES A FACTOR, IT WILL BE THE CONTRACTORS DECISION TO CONTINUE WITH THE DETOUR OPERATION OR RETAIN THE EXISTING TRAVELWAY OPEN TO TRAFFIC WHEN ANY OR ALL OF THE REQUIREMENTS OF THE DETOUR CANNOT BE ACCOMPLISHED.

4. PAVEMENT MARKINGS SHALL BE REMOVED TO THE FULLEST EXTENT POSSIBLE, SO AS NOT TO LEAVE A DISCERNIBLE MARKING., BY ANY METHOD THAT DOES NOT MATERIALLY DAMAGE THE SURFACE OR TEXTURE OF THE PAVEMENT. SUBJECT TO THE APPROVAL OF THE ENGINEER, ANY METHOD THAT PROVES TO BE SUCCESSFUL ON A PARTICULAR TYPE PAVEMENT MAY BE USED. OVERPAINTING OF THE MARKING WILL NOT BE PERMITTED. REMOVAL OF RAISED PAVEMENT MARKINGS SHALL BE AS DIRECTED BY THE ENGINEER.

5. WHERE MECHANICAL MEANS OF MARKING REMOVAL HAVE BEEN EMPLOYED TO COMPLETELY REMOVE THE MARKING AND ITS REFLECTIVITY, PAINT OF A COLOR MATCHING PAVEMENT SURFACE OR USED CRANKCASE OIL MAY BE EMPLOYED IF NECESSARY, AS A MEANS OF COVERING CONTRASTING PAVEMENT TEXTURE. NIGHTTIME INSPECTIONS ARE NEEDED TO VERIFY THE CONTINUED EFFECTIVENESS OF THE CHANGE.

6. PAVEMENT MARKINGS TO BE REMOVED SHALL BE AS SHOWN IN THE PLANS OR AS DIRECTED BY THE ENGINEER. REMOVAL OF PAVEMENT MARKINGS WILL BE CONSIDERED SUBSIDIARY TO THE ITEM, BARRICADES, SIGNS AND TRAFFIC HANDLING.

NOTE: DETAILS SHOWN ON THESE SHEET ARE MINIMUM REQUIREMENTS.

REFERENCE ONLY

THIS STANDARD CONSTRUCTION DETAIL IS INCLUDED FOR INFORMATION PURPOSES ONLY. REVISIONS BY OTHERS MAY OCCUR.

CITY OF SACHSE, TEXAS
DEPARTMENT OF ENGINEERING

STANDARD CONSTRUCTION DETAILS
MISCELLANEOUS DETAILS

CONSTRUCTION SIGNS & BARRICADES

APPROVED:

DATE: NOVEMBER 2008 | REVISED:

MINIMUM CONSTRUCTION WARNING SIGN SPACING

POSTED SPEED OR 85% SPEED	30 OR LESS	35	40	45	50	55*
X MINIMUM DISTANCE (FT)	80	120	160	240	320	500

* FOR ROADS WITH A 55 MPH POSTED SPEED LIMIT, ADVANCE WARNING SIGNS SHOULD BE PLACED APPROXIMATELY 1,500 FEET IN ADVANCE OF THE CONDITION TO WHICH THEY ARE CALLING ATTENTION. WHERE A SERIES OF ADVANCE WARNING SIGNS ARE USED, THE WARNING SIGN NEAREST THE WORK SITE SHOULD BE PLACED APPROXIMATELY 500 FEET FROM THE POINT OF RESTRICTION WITH THE ADDITIONAL SIGN AT APPROXIMATELY 500-1000 FOOT INTERVALS.

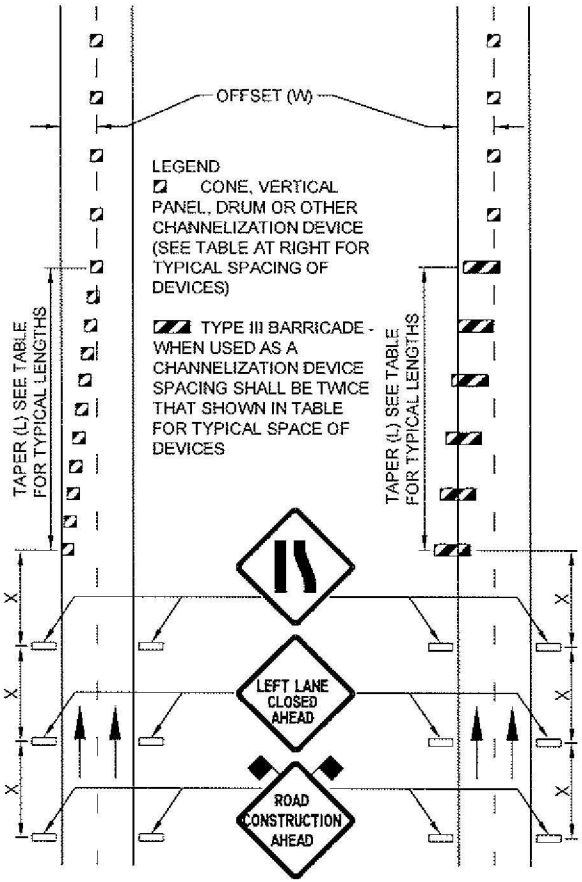

TYPICAL TRANSITION LENGTHS AND SUGGESTED MAXIMUM SPACING OF CHANNELIZING DEVICES

		MAXIMUM DESIRABLE TAPER LENGTH **			SUGGESTED MAXIMUM SPACES OF DEVICE	
POSTED SPEED *	FORMULA	10' OFFSET	11' OFFSET	12' OFFSET	ON A TAPER	ON A TANGENT
30	$L = \frac{WS^2}{60}$	150'	165'	180'	30	60' - 75'
35		205'	225'	245'	35	70' - 90'
40		265'	295'	320'	40	90' - 100'
45	L = WS	450'	495'	540'	45	90' - 110'
50		500'	550'	600'	50	100' - 125'
55		550'	605'	660'	55	110' - 140'
60		600'	660'	720'	60	120' - 150'

* 85TH PERCENTILE SPEED MAY BE USED ON ROADS WHERE TRAFFIC SPEEDS NORMALLY EXCEED THE POSTED SPEED LIMIT.
** TAPER LENGTHS HAVE BEEN ROUNDED OFF.
L = LENGTH OF TAPER (FT), W = WIDTH OF OFFSET (FT), S = POSTED SPEED

TYPICAL TRANSITION & SIGNING FOR DIVIDED ROADWAYS

NOTE: DETAILS SHOWN ON THESE SHEET ARE MINIMUM REQUIREMENTS.

REFERENCE ONLY

THIS STANDARD CONSTRUCTION DETAIL IS INCLUDED FOR INFORMATION PURPOSES ONLY. REVISIONS BY OTHERS MAY OCCUR.

CITY OF SACHSE, TEXAS
DEPARTMENT OF ENGINEERING

STANDARD CONSTRUCTION DETAILS
MISCELLANEOUS DETAILS

CONSTRUCTION SIGNS & BARRICADES

APPROVED:

DATE: NOVEMBER 2008 | REVISED:

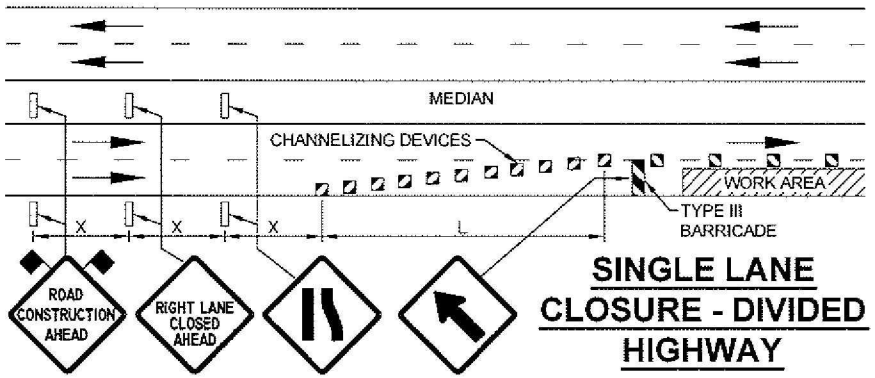

SINGLE LANE CLOSURE - DIVIDED HIGHWAY

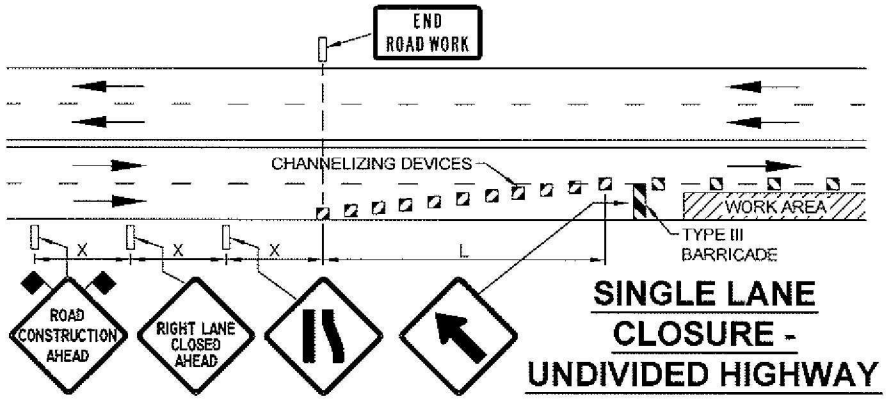

SINGLE LANE CLOSURE - UNDIVIDED HIGHWAY

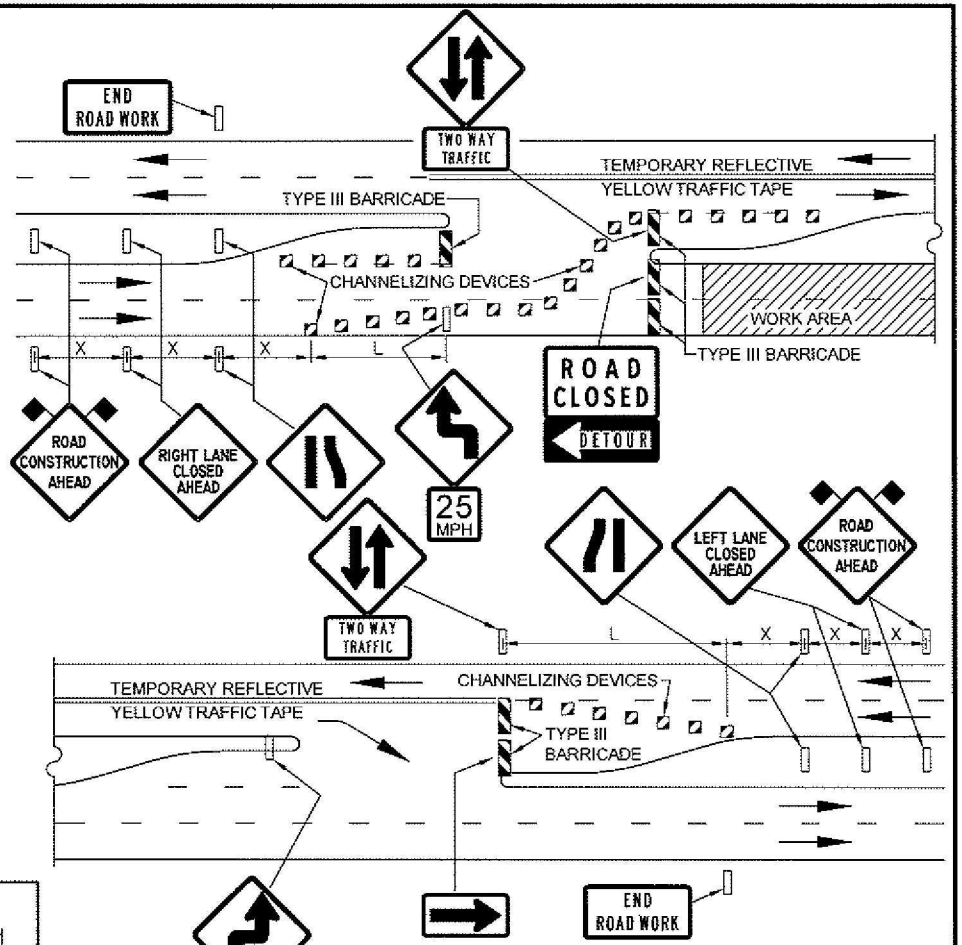

SINGLE DIRECTION CLOSURE - 4 LANE DIVIDED ROADWAY

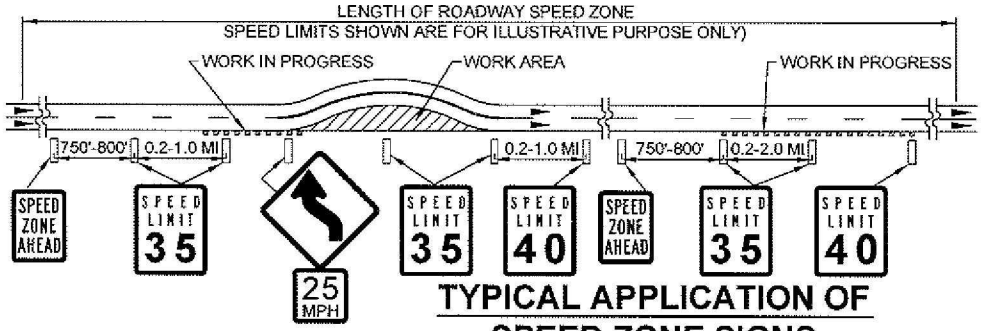

TYPICAL APPLICATION OF SPEED ZONE SIGNS

NOTES:

1. FREQUENCY OF SPEED SIGNS SHOULD BE EVERY 0.2 TO 2.0 MILES FOR SPEEDS 40 MPH AND ABOVE AND 0.2 TO 1.0 MILES FOR SPEEDS 35 AND BELOW.
2. REDUCE SPEEDS WHEN REQUIRED SHOULD ONLY BE POSTED IN THE VICINITY OF WORK BEING PERFORMED OR OTHER AREAS NEEDED RATHER THAN THROUGHOUT THE ENTIRE PROJECT.
3. SPEED ZONE SIGNS ARE ILLUSTRATED FOR ONE DIRECTION OF TRAVEL ONLY AND ARE NORMALLY POSTED FOR EACH DIRECTION OF TRAVEL.
4. REGULATORY CLASS SPEED ZONE SIGNS SHALL HAVE BLACK LEGEND ON A WHITE REFLECTIVE BACKGROUND.

NOTE: DETAILS SHOWN ON THESE SHEET ARE MINIMUM REQUIREMENTS.

REFERENCE ONLY

THIS STANDARD CONSTRUCTION DETAIL IS INCLUDED FOR INFORMATION PURPOSES ONLY. REVISIONS BY OTHERS MAY OCCUR.

CITY OF SACHSE, TEXAS
DEPARTMENT OF ENGINEERING

STANDARD CONSTRUCTION DETAILS
MISCELLANEOUS DETAILS

CONSTRUCTION SIGNS & BARRICADES

APPROVED:

DATE: NOVEMBER 2008 | REVISED:

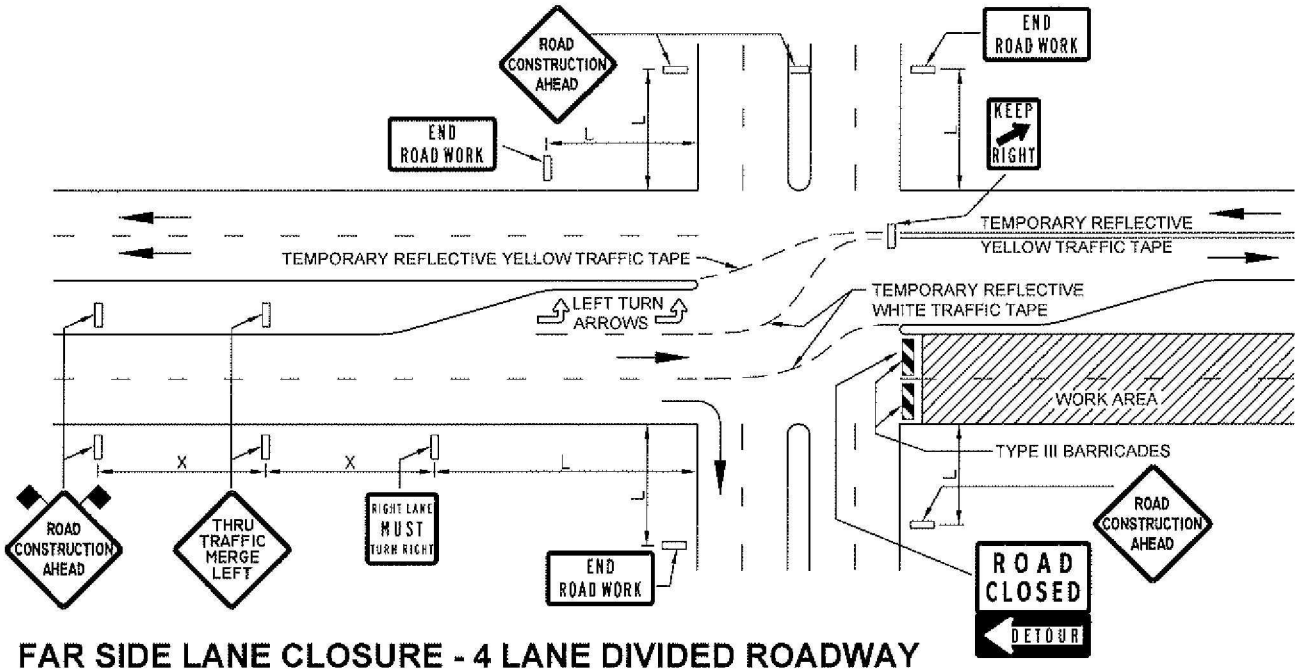

FAR SIDE LANE CLOSURE - 4 LANE DIVIDED ROADWAY

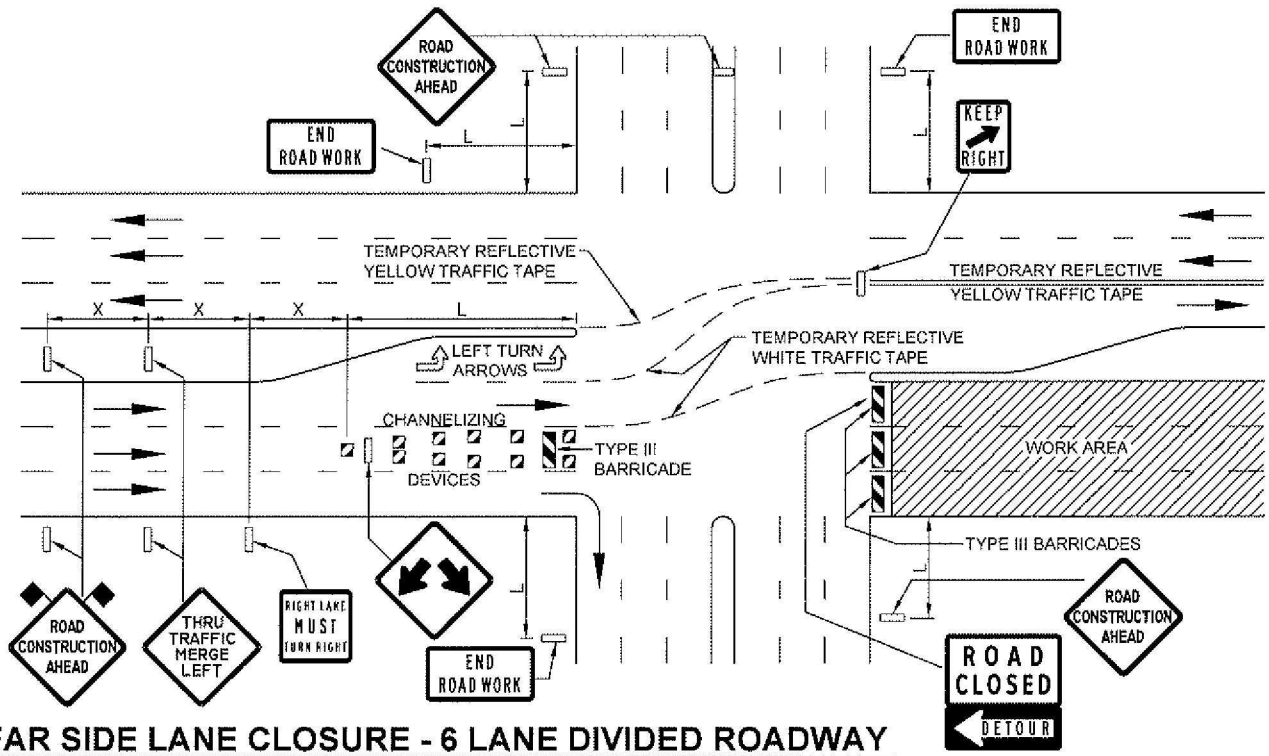

FAR SIDE LANE CLOSURE - 6 LANE DIVIDED ROADWAY

NOTE: DETAILS SHOWN ON THESE SHEET ARE MINIMUM REQUIREMENTS.

REFERENCE ONLY

THIS STANDARD CONSTRUCTION DETAIL IS INCLUDED FOR INFORMATION PURPOSES ONLY. REVISIONS BY OTHERS MAY OCCUR.

CITY OF SACHSE, TEXAS DEPARTMENT OF ENGINEERING		
STANDARD CONSTRUCTION DETAILS MISCELLANEOUS DETAILS		
CONSTRUCTION SIGNS & BARRICADES		
APPROVED:		
DATE: NOVEMBER 2008	REVISED:	Page 5

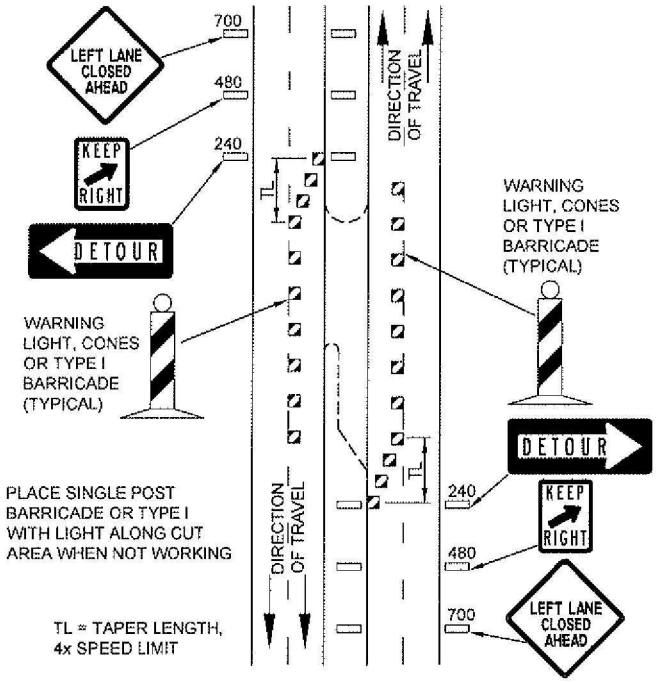

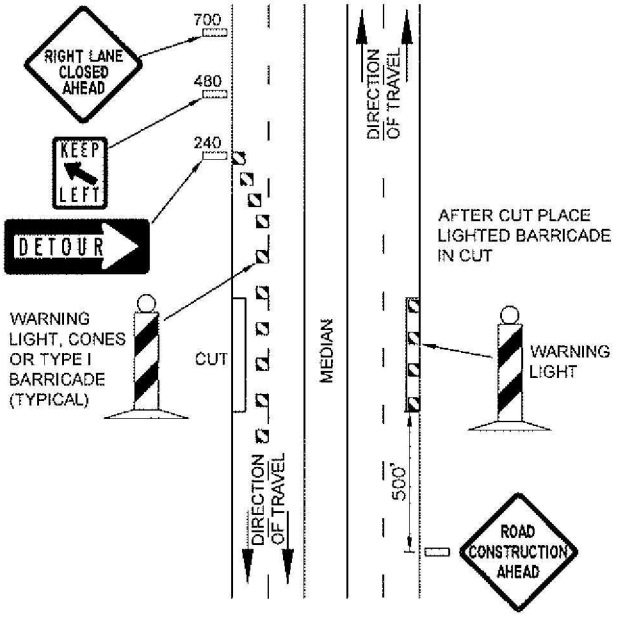

NOTE: ALL BARRICADING SHOULD MEET TEXAS MANUAL ON UNIFORM TRAFFIC CONTROL DEVICES. REFER TO THIS MANUAL FOR OTHER SITUATIONS.

TYPICAL BARRICADING DETAILS

CITY OF SACHSE, TEXAS DEPARTMENT OF ENGINEERING		
STANDARD CONSTRUCTION DETAILS MISCELLANEOUS DETAILS		
CONSTRUCTION SIGNS & BARRICADES		
APPROVED:		
DATE: NOVEMBER 2008	REVISED:	Page 6

SECTION 6-E
OTHER DETAILS

CITY OF SACHSE, TEXAS DEPARTMENT OF ENGINEERING		
STANDARD CONSTRUCTION DETAILS MISCELLANEOUS DETAILS		
OTHER DEATAILS		
APPROVED:		
DATE: NOVEMBER 2008	REVISED:	Page 1

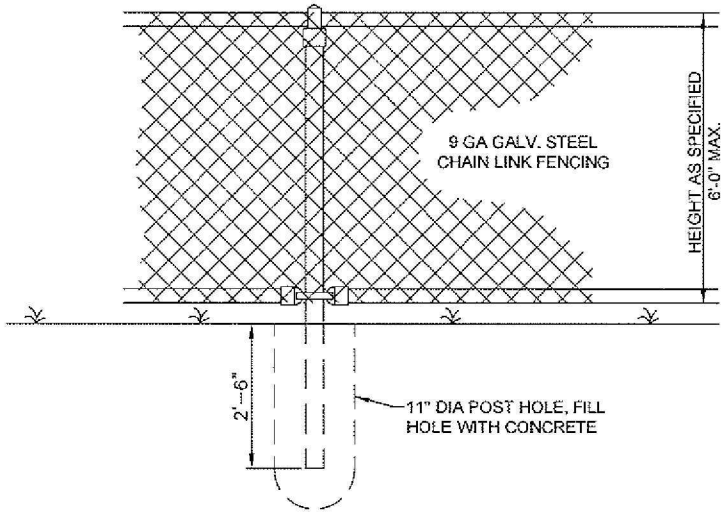

MIN SIZES
LINE POST - 2" OD STEEL PIPE
WEIGHT - 2.72 LB/FT
TERMINAL POST - 2½" OD STEEL PIPE
WEIGHT - 3.65 LB/FT
TOP RAIL - 1½" OD STEEL PIPE
WEIGHT - 2.27 LB/FT
MAX SPACING BETWEEN POSTS - 10'-0"

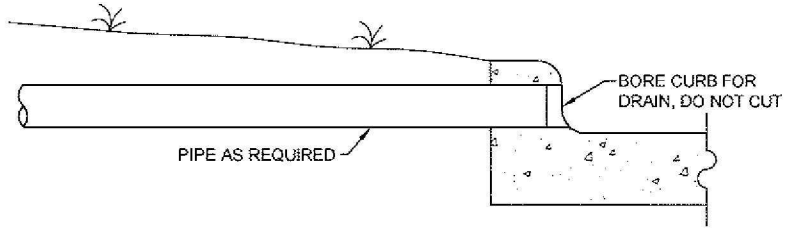

CURB DRAIN

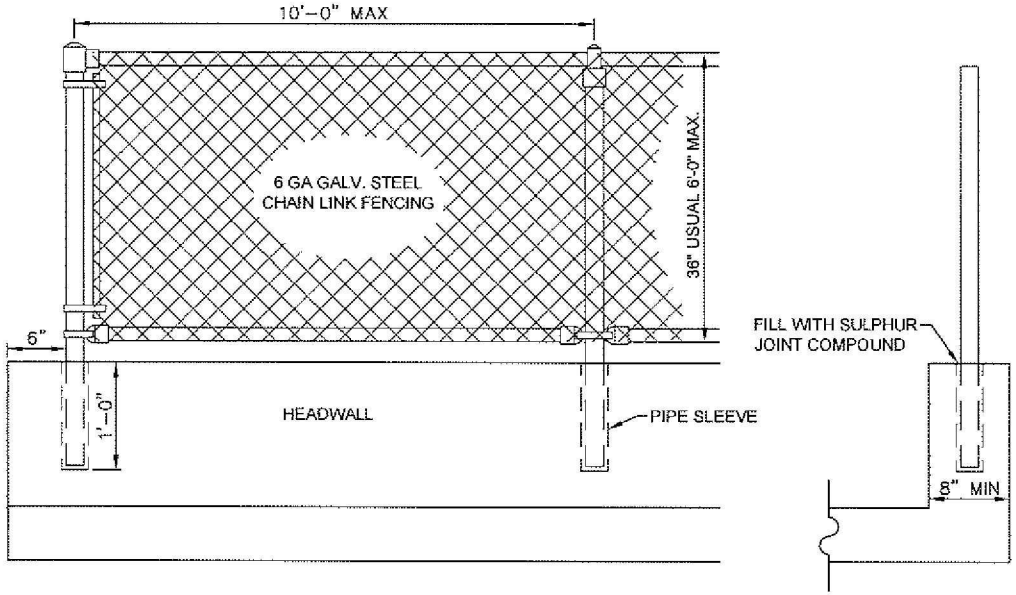

THIS STANDARD CONSTRUCTION DETAIL IS INCLUDED FOR INFORMATION PURPOSES ONLY. REVISIONS BY OTHERS MAY OCCUR.

CITY OF SACHSE, TEXAS DEPARTMENT OF ENGINEERING	
STANDARD CONSTRUCTION DETAILS MISCELLANEOUS DETAILS	
OTHER DEATAILS	
APPROVED:	
DATE: NOVEMBER 2008	REVISED:

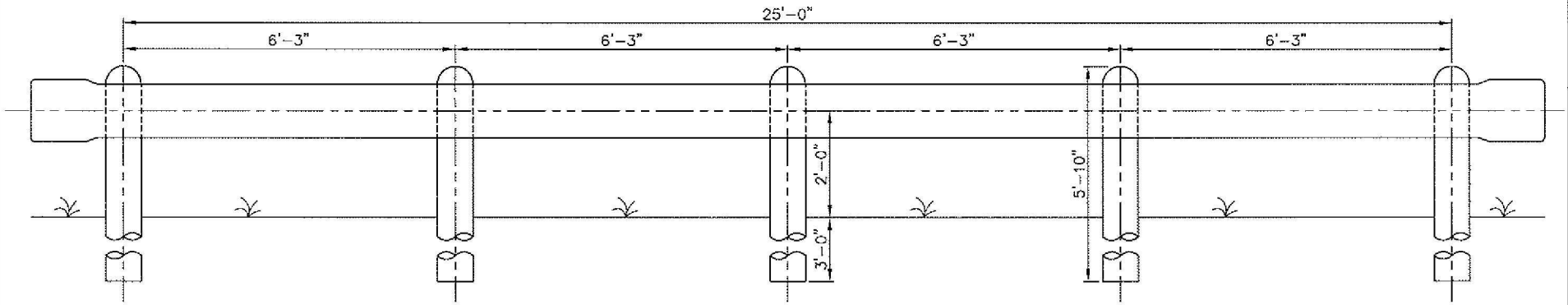

BARRICADE FOR STREETS

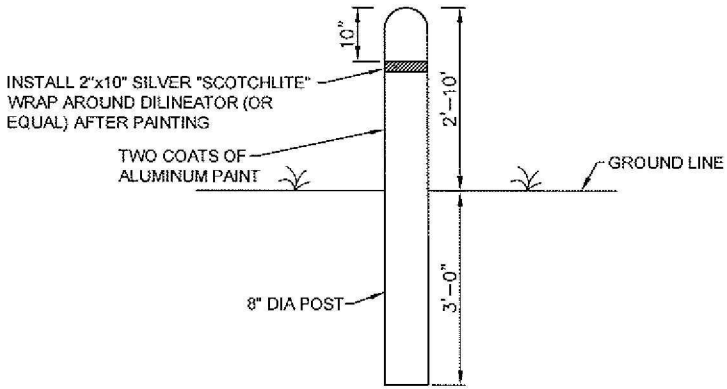

WOOD GUARD POST

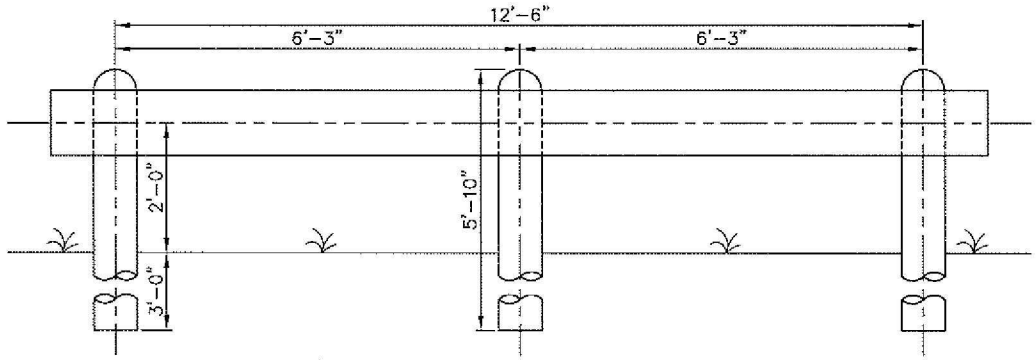

BARRICADE FOR ALLEYS

THIS STANDARD CONSTRUCTION DETAIL IS INCLUDED FOR INFORMATION PURPOSES ONLY. REVISIONS BY OTHERS MAY OCCUR.

CITY OF SACHSE, TEXAS DEPARTMENT OF ENGINEERING		
STANDARD CONSTRUCTION DETAILS MISCELLANEOUS DETAILS		
OTHER DEATAILS		
APPROVED:		
DATE: NOVEMBER 2008	REVISED:	Page 3

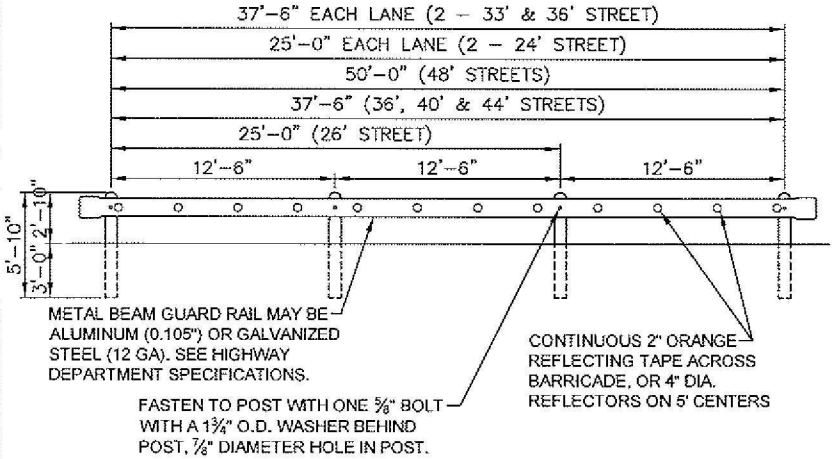

BARRICADE DETAIL

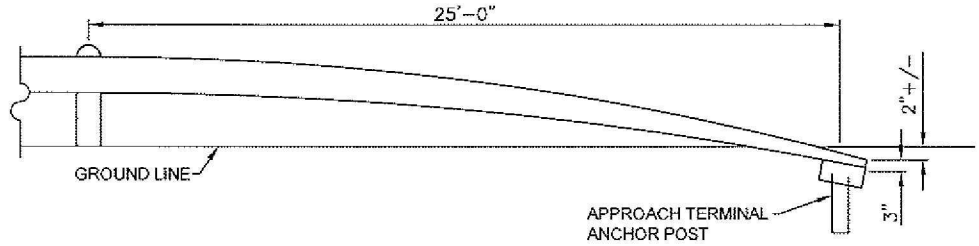

DETAIL OF GUARDRAIL ANCHOR

(ON APPROACHING TRAFFIC SIDE)

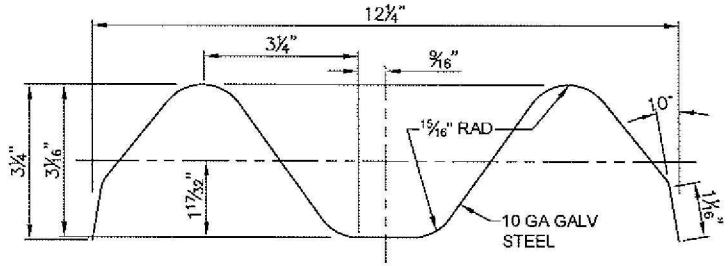

SECTION THROUGH RAIL ELEMENT

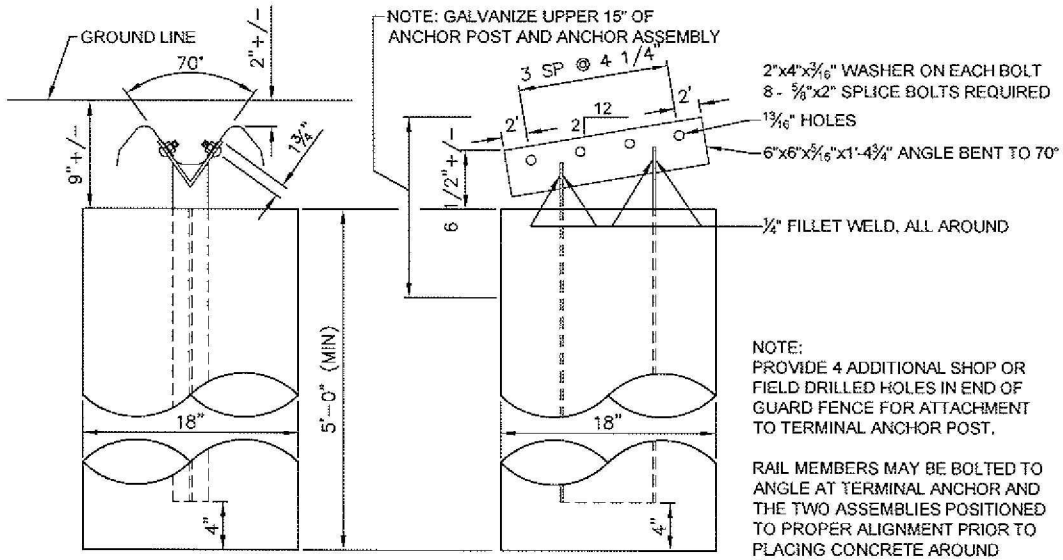

NOTE:
PROVIDE 4 ADDITIONAL SHOP OR FIELD DRILLED HOLES IN END OF GUARD FENCE FOR ATTACHMENT TO TERMINAL ANCHOR POST.

RAIL MEMBERS MAY BE BOLTED TO ANGLE AT TERMINAL ANCHOR AND THE TWO ASSEMBLIES POSITIONED TO PROPER ALIGNMENT PRIOR TO PLACING CONCRETE AROUND 8WF17 POSTS.

DETAIL OF TERMINAL ANCHOR POST

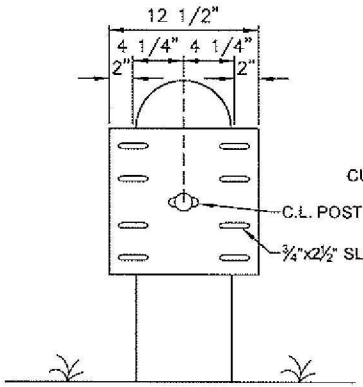

RAIL SPLICE

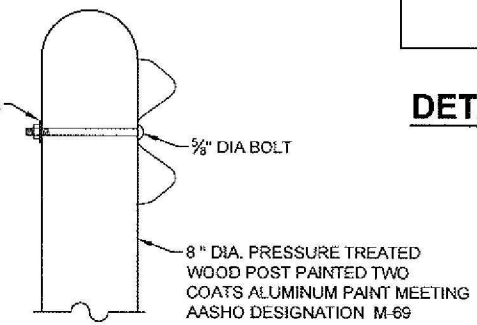

ARRANGEMENT AT POST

THIS STANDARD CONSTRUCTION DETAIL IS INCLUDED FOR INFORMATION PURPOSES ONLY. REVISIONS BY OTHERS MAY OCCUR.

CITY OF SACHSE, TEXAS DEPARTMENT OF ENGINEERING	
STANDARD CONSTRUCTION DETAILS MISCELLANEOUS DETAILS	
OTHER DEATAILS	
APPROVED:	
DATE: NOVEMBER 2008	REVISED:

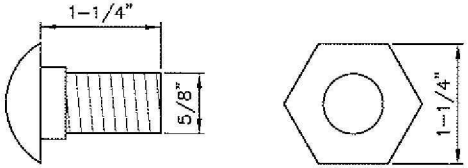

SPLICE BOLT & NUT

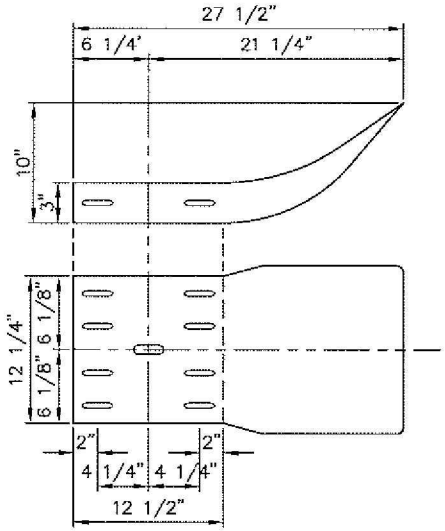

TERMINAL SECTION

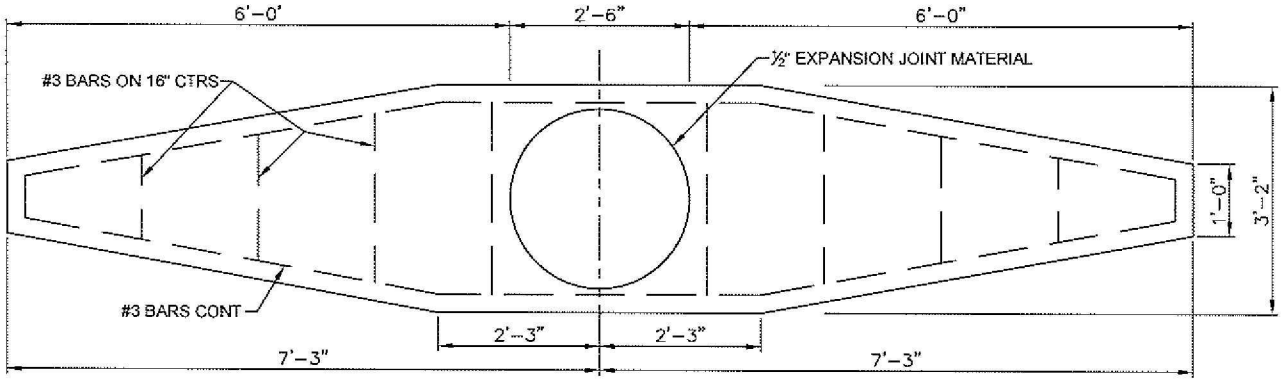

DETAIL OF LIGHTING PAD

LIGHTING PAD TO BE BUILT AFTER INSTALLATION OF LUMINARY FOUNDATION, REINFORCED PAD TO BE 4" THICK, 2500 PSI REINFORCED CONCRETE

THIS STANDARD CONSTRUCTION DETAIL IS INCLUDED FOR INFORMATION PURPOSES ONLY. REVISIONS BY OTHERS MAY OCCUR.

CITY OF SACHSE, TEXAS DEPARTMENT OF ENGINEERING		
STANDARD CONSTRUCTION DETAILS MISCELLANEOUS DETAILS		
OTHER DEATAILS		
APPROVED:		
DATE: NOVEMBER 2008	REVISED:	Page 5

Sachse City Hall
3815 Sachse Road Building
B
Sachse, Texas 75048

Legislation Details (With Text)

File #:	13-1399	**Version:**	1	**Name:**	Western Rim Executive Session
Type:	Agenda Item			**Status:**	Agenda Ready
File created:	2/28/2013			**In control:**	City Council
On agenda:	3/4/2013			**Final action:**	

Title: The City Council shall convene into Executive Session pursuant to the TEXAS GOVERNMENT CODE, Section § 551.087 (Economic Development) to deliberate on economic development incentives and financial prospects for property located on the Northwest side of State Highway 78, approximately 500 feet Northeast of the intersection of Ranch Road and State Highway 78.

Consider any action necessary as a result of executive session.

Executive Summary
Closed Executive Session as provided by State Law.

Sponsors:

Indexes:

Code sections:

Attachments:

Date	Ver.	Action By	Action	Result

Title
The City Council shall convene into Executive Session pursuant to the TEXAS GOVERNMENT CODE, Section § 551.087 (Economic Development) to deliberate on economic development incentives and financial prospects for property located on the Northwest side of State Highway 78, approximately 500 feet Northeast of the intersection of Ranch Road and State Highway 78.

Consider any action necessary as a result of executive session.

Executive Summary
Closed Executive Session as provided by State Law.

Background
This agenda item is provided for the City Council to meet in executive session to deliberate the offer of a financial incentive to a business prospect, in accordance with Texas Government Code.

Policy Considerations
None.

powered by Legistar™

Budgetary Considerations
None.

Staff Recommendations
Conduct executive session and take any action appropriate.